Commercial & Industrial Energy Storage System

SUN-100K-PCS01HP3

SUN-125K-PCS01HP3

SUN-MPPT-L01-EU-AM8

SUN-STS500L

User Manual



Contents

1. Safety Introductions 01-09
   1.1 Personal Safety
   1.2 Electrical Safety
   1.3 Environment Requirements
   1.4 Mechanical Safety
2. Product Instructions 09-19
   2.1 Product Overview
   2.2 Function Port Definition
   2.3 Product Size
   2.4 Product Features
   2.5 Basic System Architecture
   2.6 Storage Requirements
3. Installation 19-61
   3.1 Parts List
   3.2 Mounting Instructions
   3.3 Product Handling Requirements
   3.4 Battery Connection
   3.5 AC Cable Connection
   3.6 Connection With MPPT Module(Optional)
   3.7 Earth Connection(Mandatory)
   3.8 Meter Or CT Installation
   3.9 Data Logger Connection
   3.10 Parallel Wiring Diagram
   3.11 Wiring diagram with neutral line grounded
   3.12 Mode
4. Operation 62-63
   4.1 Power ON/OFF
   4.2 Operation And Display Panel
5. Commissioning Through LCD 64-83
   5.1 Main Screen
   5.2 Basic Setup
   5.3 System Work Mode
   5.4 Grid Setup
   5.5 STS Setup
   5.6 Fault Code
   5.7 Battery Setup
   5.8 Advance
6. Warranty 83
7. Troubleshooting 84-89
8. Datasheet 90-92
9. Appendix I 93-94
10. EU Declaration Of Conformity 94-97

About This Manual

This manual provides information and guidelines for the installation, operation, and maintenance of the Deye Commercial & Industrial Storage System, including:

- SUN-(100-125)K-PCS01HP3 Power Conversion System (referred to as PCS)
- SUN-MPPT-L01-EU-AM8
- SUN-STS500L Static Transfer Switch (STS)

How To Use This Manual

Before performing any operation, carefully read this manual and all related documents. Ensure these documents are stored safely and remain easily accessible at all times.

Please note that the contents of this manual may be updated or revised periodically due to ongoing product development. As a result, the information provided herein is subject to change without prior notice. The latest version of the manual can be obtained by contacting service@deye.com.cn.

1. Safety Introductions

Labels Description

Label	Description
	The 'Caution: Risk of Electric Shock' symbol signifies important safety instructions. Incorrect adherence may result in electric shock.
	The DC input terminals of the device must not be grounded.
	High surface temperature, Please do not touch the device case.
	The AC and DC circuits must be disconnected separately. Maintenance personnel must wait for 5 minute until the system is completely powered off before beginning work.
	CE mark of conformity
	Please read the instructions carefully before use.
	Symbol for marking electrical and electronic devices in accordance with Directive 2002/96/EC. This symbol indicates that the device, its accessories, and packaging must not be disposed of as unsorted municipal waste. They must be collected separately at the end of their service life. Please follow local ordinances or regulations for proper disposal, or contact an authorized representative of the manufacturer for guidance on decommissioning the equipment.

1.1 Personal Safety

DANGER

1. Ensure the power is off during installation. Do not install or remove cables while the system is powered on. Transient contact between the cable core and the conductor can generate electric arcs or sparks, potentially causing fire or personal injury.
2. Improper handling of energized equipment can result in serious hazards. Non-standard or incorrect operations may lead to fire, electric shock, or explosion, causing property damage, personal injury, or even death.
3. Remove conductive objects before working. Take off watches, bracelets, rings, necklaces, and other metallic accessories to prevent the risk of electric shock.
4. Use dedicated insulated tools. During operation, always use tools designed for electrical work to prevent electric shock or short circuits. The dielectric withstand voltage of the tools must comply with local laws, regulations, standards, and specifications.

WARNING

During operations, wear personal protective equipment such as protective clothing, insulated shoes, goggles, safety helmets, and insulated gloves.

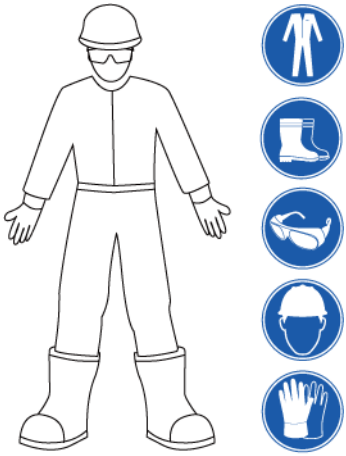

Figure 1-1 Personal protective equipment

General Requirements

• Do not disable protective devices. Follow all warnings, cautions, and precautionary measures outlined in this document and on the equipment.
• If there is a risk of personal injury or equipment damage during operation, stop immediately, report the issue to a supervisor, and take appropriate protective measures.
• Do not power on the equipment until it has been installed and confirmed by a qualified professional.
• Avoid direct contact with power supply equipment or conductive materials such as damp objects. Before touching any conductor surface or terminal, always measure the voltage at the contact point to ensure there is no risk of electric shock.
• Do not touch the enclosure of operating equipment, as it may be hot.
• Keep hands, tools, and other objects away from running fans. Contact with components, screws, tools, or circuit boards may cause personal injury or equipment damage.
• In the event of a fire, evacuate the building or equipment area immediately and activate the fire alarm or call emergency services. Under no circumstances should you re-enter the affected area.

Personnel Requirements

• Only qualified professionals and trained personnel are permitted to operate the equipment.
• Professionals: Individuals who are familiar with the working principles and structure of the equipment, have undergone training or have relevant experience in equipment operations, and have a clear understanding of potential hazards associated with equipment installation, operation, and maintenance.
• Trained personnel: Individuals who have received technical and safety training, possess the required experience, are aware of potential hazards in specific operations, and are capable of implementing protective measures to minimize risks to themselves and others.
• Personnel responsible for installing or maintaining the equipment must receive adequate training, be capable of performing all operations correctly, and fully understand necessary safety precautions as well as relevant local standards.
• Only qualified professionals or trained personnel are authorized to install, operate, and maintain the equipment.
• Only qualified professionals are permitted to remove safety devices and inspect the equipment.
• Personnel performing specialized tasks such as electrical operations, working at heights, or operating special equipment must hold the necessary local qualifications.
• Only authorized professionals are permitted to replace equipment or components, including software.
• Only personnel with work-related responsibilities are allowed access to the equipment.

1.2 Electrical Safety

⚠ DANGER

1. Before connecting cables, ensure that the equipment is intact. Otherwise, electric shocks or fires may occur.
2. Non-standard or improper operations may result in fires or electric shocks.
3. Prevent foreign matter from entering the equipment during operations. Otherwise,equipment short-circuits or damage, load power derating, power failure, or personal injury may occur.

⚠ WARNING

For equipment that requires grounding, connect the ground cable first during installation and disconnect it last during removal.

⚠ CAUTION

Do not route cables near the air intake or exhaust vents of the equipment.

General Requirements

• Follow the procedures described in this document for installation, operation, and maintenance. Do not modify or alter the equipment, add components, or change the installation sequence without prior authorization.
• Obtain approval from the national or local electric utility company before connecting the equipment to the grid.
• Comply with power plant safety regulations, such as operational and work permit mechanisms.
• Install temporary fences or warning ropes and place "No Entry" signs around the operation area to prevent unauthorized access.
• Before installing or removing power cables, turn off the equipment switches as well as the upstream and downstream switches.
• Before performing operations on the equipment, ensure that all tools meet the requirements and record them. After completing the operations, collect all tools to prevent any from being left inside the equipment.
• Before installing power cables, verify that cable labels are correct and that cable terminals are properly insulated.
• When installing the equipment, use a torque tool with an appropriate measurement range to tighten the screws. If using a wrench, ensure that it remains level and that the torque error does not exceed 10% of the specified value.
• Ensure that bolts are tightened using a torque tool and marked in red and blue after double-checking:
• Installation personnel mark tightened bolts in blue.
• Quality inspection personnel confirm the bolts are securely tightened and then mark them in red. (The markings must cross the edges of the bolts.)

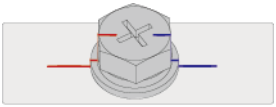

• If the equipment has multiple inputs, disconnect all inputs and wait until the equipment is completely powered off before performing any operations.
• Before maintaining a downstream electrical or power distribution device, turn off the output switch on the power supply equipment.
• During equipment maintenance, attach "Do Not Switch On" labels near the upstream and downstream switches or circuit breakers, along with warning signs, to prevent accidental reconnection. The equipment should only be powered on after troubleshooting is complete.
• Do not open equipment panels.
• Periodically check equipment connections to ensure that all screws are securely tightened.
• Only qualified professionals are allowed to replace damaged cables.
• Do not deface, damage, or obscure any labels or nameplates on the equipment. Promptly replace any worn-out labels.
• Do not use solvents such as water, alcohol, or oil to clean electrical components inside or outside the equipment.

Grounding

• Ensure that the grounding impedance of the equipment complies with local electrical standards.
• Ensure that the equipment is permanently connected to the protective ground. Before operating the equipment, verify that its electrical connection is secure and reliably grounded.
• Do not work on the equipment if a properly installed ground conductor is absent.

Cabling Requirements

• When selecting, installing, and routing cables, follow local safety regulations and standards.
• When routing power cables, ensure they are not coiled or twisted. Do not join or weld power cables. If necessary, use a longer cable.
• Ensure that all cables are properly connected, insulated, and meet specifications.
• Ensure that cable slots and routing holes are free from sharp edges. When cables pass through pipes or cable holes, use cushioning materials to prevent damage from sharp edges or burrs.
• Ensure that cables of the same type are neatly bundled and arranged straight, with their sheaths intact. When routing different types of cables, keep them separated to prevent entanglement and overlapping.
• Secure buried cables using cable supports and clips. Ensure that cables in the backfill area are in close contact with the ground to prevent deformation or damage during backfilling.
• If external conditions (such as cable layout or ambient temperature) change, verify cable specifications in accordance with IEC 60364-5-52 or local laws and regulations. For example, check that the current-carrying capacity meets the requirements.
• Maintain at least 30 mm of clearance between cables and heat-generating components or areas to prevent deterioration or damage to the cable insulation layer.

1.3 Environment Requirements

⚠ DANGER

1. Do not expose the equipment to flammable or explosive gases or smoke. Do not perform any operations on the equipment in such environments.
2. Do not store any flammable or explosive materials in the equipment area.
3. Do not place the equipment near heat sources or open flames, such as cigarettes, candles, heaters, or other heating devices. Overheating may damage the equipment or cause a fire.

⚠ WARNING

1. Install the equipment in an area far away from liquids. Do not install it under areas prone to condensation, such as under water pipes and air exhaust vents, or areas prone to water leakage, such as air conditioner vents, ventilation vents, or feeder windows of the equipment room. Ensure that no liquid enters the equipment to prevent faults or short circuits.
2. To prevent damage or fire due to high temperature, ensure that the ventilation vents or heat dissipation systems are not obstructed or covered by other objects while the equipment is running.

General Requirements

• Store the equipment in accordance with the specified storage requirements. Damage caused by improper storage conditions is not covered under the warranty.
• Ensure that the installation and operating environments remain within the specified limits. Failure to do so may compromise the equipment's performance and safety.
• The operating temperature range specified in the equipment's technical documentation refers to the ambient temperature of the installation environment.
• Do not install, use, or operate outdoor equipment and cables (including but not limited to moving or operating equipment, inserting or removing connectors from signal ports connected to outdoor facilities, working at heights, performing outdoor installation, or opening doors) in harsh weather conditions such as lightning, rain, snow, or winds of level 6 or stronger.
• Do not install the equipment in an environment containing dust, smoke, volatile or corrosive gases, infrared or other radiation sources, organic solvents, or salty air.
• Do not install the equipment in an environment containing conductive metal or magnetic dust.
• Do not install the equipment in areas conducive to the growth of microorganisms, such as fungus or mildew.
• Do not install the equipment in areas with strong vibrations, noise, or electromagnetic interference. The equipment must be installed in an environment where the magnetic field strength is less than 4 Gauss. If the magnetic field strength is 4 Gauss or higher, the equipment may fail to function properly. In high-magnetic-field environments, such as smelteries, use a Gauss meter to measure the magnetic field strength at the installation site while the smelting equipment is operating normally.
• Ensure that the installation site complies with all applicable local laws, regulations, and relevant standards.
• Ensure that the ground in the installation environment is solid, free from spongy or soft soil, and not prone to subsidence. The site must not be located in a low-lying area prone to water or snow accumulation. The installation site's elevation must be above the highest recorded water level for that area.
• Do not install the equipment in locations that may be submerged in water.
• Do not install the equipment outdoors in salt-affected areas, as this may lead to corrosion. A salt-affected area refers to regions within 500 meters of the coast or areas exposed to sea breezes. The extent of sea breeze influence may vary depending on weather conditions (such as typhoons and monsoons) or geographical features (such as dams and hills).
• Before opening doors during installation, operation, or maintenance, remove any water, ice, snow, or foreign objects from the top of the equipment to prevent them from falling inside.
• When installing the equipment, ensure that the installation surface is strong enough to support its weight.
• After installation, remove all packing materials, including cartons, foam, plastic, and cable ties, from the equipment area.

1.4 Mechanical Safety

⚠ WARNING

1. Ensure that all necessary tools are prepared and inspected by a certified professional organization. Do not use tools that show signs of damage, such as scratches, fail to pass inspection, or have exceeded their inspection validity period. Ensure that the tools are secure and not overloaded.
2. Do not drill holes into the equipment. Doing so may compromise its sealing performance and electromagnetic containment, potentially damaging internal components or cables. Metal shavings from drilling may cause short circuits on circuit boards inside the equipment.

General Requirements

• Repaint any scratches caused during equipment transportation or installation in a timely manner. Equipment with scratches must not be left exposed for an extended period of time.
• Do not perform operations such as arc welding or cutting on the equipment without prior evaluation by the Company.
• Do not install any devices on top of the equipment without prior evaluation by the Company.
• When performing operations above the equipment, take necessary precautions to protect it from damage.
• Use the correct tools and operate them properly.

Moving Heavy Objects

• Be cautious to prevent injury when moving heavy objects.



• If multiple people need to move a heavy object together, determine the required manpower and work division, considering factors like height and other conditions, to ensure the weight is equally distributed.
• If two or more people are moving a heavy object together, ensure that the object is lifted and lowered simultaneously, and moved at a uniform pace under the supervision of one person.
• Wear personal protective gear, such as gloves and shoes, when manually moving the equipment.
• When moving an object by hand, approach it, squat down, and lift the object gently and steadily using the strength of your legs rather than your back. Do not lift it suddenly or twist your body.
• Do not lift a heavy object above your waist too quickly. Place the object on a workbench that is about waist height or another suitable surface, adjust your hand positions, and then lift it.
• Move a heavy object steadily with balanced force at a consistent, slow speed. Lower the object gently to avoid collision or damage to the surface, components, or cables.
• When moving a heavy object, be aware of obstacles such as workbenches, slopes, stairs, and slippery surfaces. When moving an object through a door, ensure the door is wide enough to accommodate the object, and avoid bumps or injuries.
• When transferring a heavy object, move your feet rather than twisting your waist. When lifting and moving a heavy object, ensure your feet are pointed in the direction of movement.
• When transporting equipment using a pallet truck or forklift, ensure the tines are properly positioned to prevent the equipment from toppling. Secure the equipment to the pallet truck or forklift using ropes before moving it. Assign a dedicated person to oversee the transport.
• Choose good-condition roads, sea transport, or airplanes for transportation. Do not transport the equipment by railway. Avoid tilting or jolting during transportation.

Using Ladders

• Use wooden or insulated ladders when you need to perform live-line working at heights.
• Platform ladders with protective rails are preferred. Single ladders are not recommended.
• Before using a ladder, check that it is intact and confirm its load-bearing capacity. Do not exceed the maximum load limit.
• Ensure the ladder is securely positioned and stable before use.



• When climbing a ladder, maintain body stability, keep your center of gravity between the side rails, and avoid overreaching.
• When using a step ladder, ensure the pull ropes are properly secured.
• If using a single ladder, position it at a 75-degree angle against the floor, as shown in the following figure. A square can be used to measure the angle.

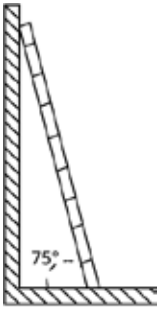

• If using a single ladder, ensure that the wider end is at the bottom and take protective measures to prevent it from sliding.
• Do not climb higher than the fourth rung from the top of a single ladder.
• When using a single ladder to access a platform, ensure that the ladder extends at least 1 meter above the platform.

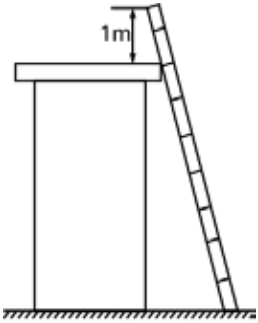

Drilling Holes

• Obtain consent from the customer and contractor before drilling holes.
• Wear protective equipment such as safety goggles and protective gloves when drilling holes.
• To avoid short circuits or other risks, do not drill holes into buried pipes or cables.
• When drilling holes, protect the equipment from shavings. After drilling, clean up any shavings.

2. Product Introductions

The PCS (Power Conversion System) performs rectification and inversion using a three-phase three-level converter. During rectification, it converts three-phase AC power into DC power, which is then stored in the energy storage system (ESS). During inversion, the DC power is converted back into three-phase AC power through a filtering process, allowing it to supply local loads or be fed into the utility grid. This PCS features a user-friendly HMI (Human-Machine Interface) with a large, touch-sensitive LCD display and intuitive physical buttons for easy operation.

The Maximum Power Point Tracking (MPPT) is an electronic DC-DC converter designed to optimize the matching between solar arrays (PV panels) and battery banks, or between PV panels and Power Conversion System (PCS) input voltage. In essence, it converts the lower-voltage DC output from solar panels into the higher voltage required to support battery charging or enable the PCS inverter output power.

The Static Transfer Switch (STS) is deployed in commercial and industrial energy storage systems to control the PCS's grid-connected/off-grid modes. The STS facilitates connections among generators, critical loads, and grid interfaces.

2.1 Product Overview

2.1.1 PCS Product Overview

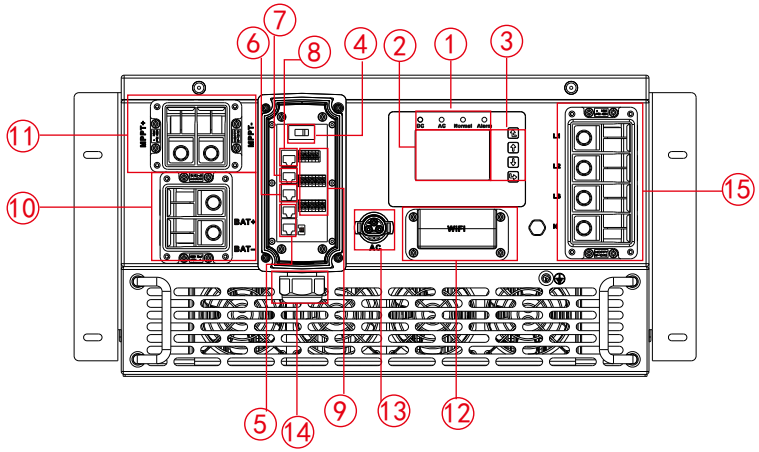

1: PCS indicators
2: LCD display
3: Function buttons
4*: Auxiliary Power Switch
5: Parallel port
6: MPPT CAN port
7: BATBMS port
8: LCD 485 port
9: Function port
10: Battery input
11: MPPT input
12: Interface for logger
13*: Auxiliary power port
14: Inlet of cables
15: AC input/output port

Note: 4*: Select auxiliary power supply for PCS from STS AC side or battery.
13*:Connect to the STS auxiliary power port to enable STS supply power to the auxiliary power of PCS.

2.1.2 MPPT Product Overview

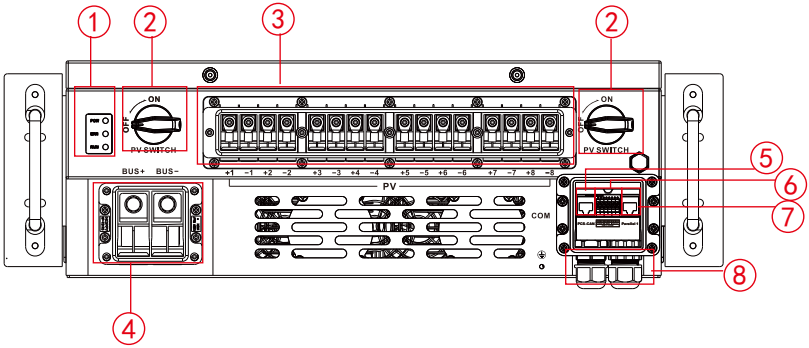

1: Indicator led light
2: PV switch
3: PV input ports
4: Battery input
5: PCS-CAN port
6: Function port
7: Parallel 1 port
8: Inlet of cables

2.1.3 STS Product Overview

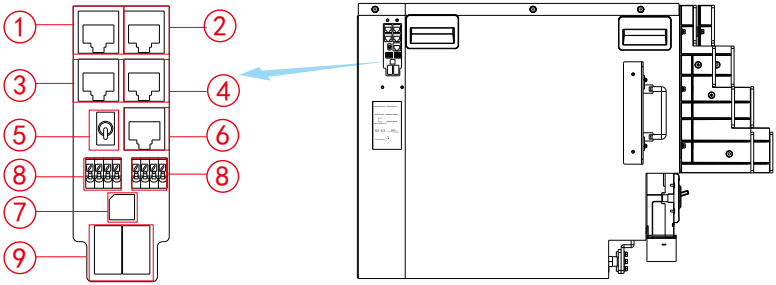

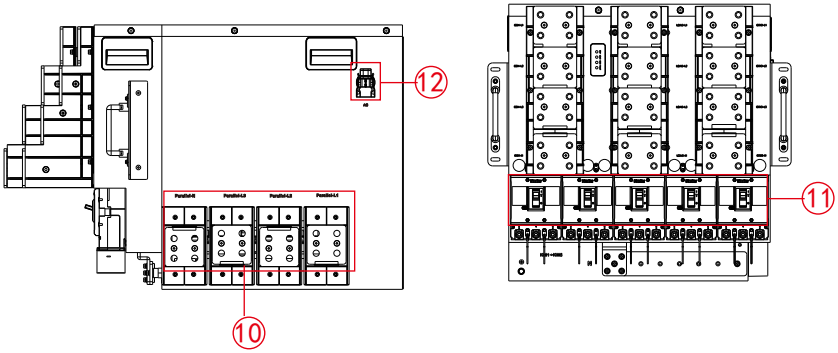

1: STS parallel B port

2: STS parallel A port

3: PCS Parallel port

4: Modbus RS485 port

5: STS parallel Resistor port

6: RS485 Meter port

7: STS Address port

8: Function port

9: Relay

10: STS Modules OFF GRID Parallel Port

11: AC breaker

12: STS Auxiliary Power Supply Port

2.2 Function Port Definition

2.2.1 PCS Function Port Definition

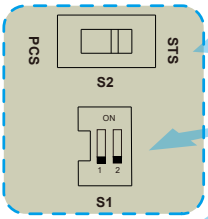

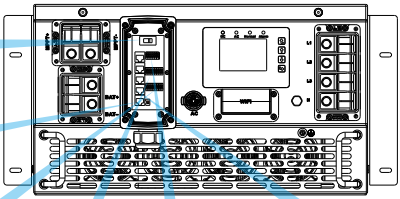

Note:
For PCS communication port cable definitions, refer to Appendix 1, Chapter 9.

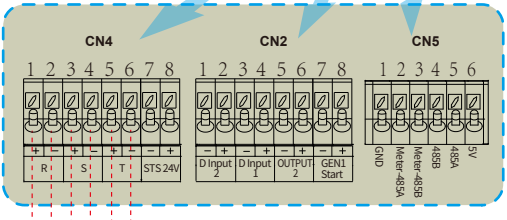

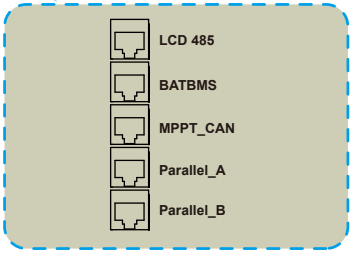

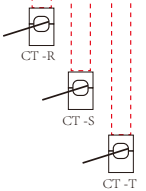

S2: Used to select whether the PCS auxiliary power supply is powered by the STS device or by the PCS AC side. If the DIP switch is set to the STS side, the power supply line for the PCS auxiliary power must be connected from the PCS Auxiliary Power Port to the STS Auxiliary Power Supply Port to establish the power supply circuit.
S1: Used to configure CAN communication impedance matching when multiple PCS units operate in parallel.

ParallelA/ParallelB: Used for parallel communication with other PCS modules, the surplus parallel port of master PCS module can be used for CAN communication with STS module,no difference between parallelA and parallelB.
MPPT CAN : Used for CAN communication between PCS module and MPPT module.
BATBMS: Used for communication between PCS module and BMS of battery set.
LCD 485: Used for communication between PCS module and external control devices,such as EMS.

CN4:
R+/R- (1,2): Input for CT on R(L1/A/U) phase.
S+/S- (3,4): Input for CT on S(L2/B/V) phase.
T+/T- (5,6): Input for CT on T(L3/C/W) phase.
STS 24V-/STS 24V+(7,8): Used to provide auxiliary power to the STS module in off-grid conditions.

CN2:
GEN1 Start -/+(7,8)： Sets of output dry contacts,a which can be used for remote start/stop control of a generator.
OUTPUT 2 -/+ (5,6):Sets of output dry contacts,a which can be used to control other external devices via customized software.
D Input 2/D Input 1 (1,2/3,4): Sets of input dry contacts,which can be used for connecting emergency stop button or other customized external control devices.

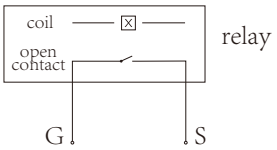

GS (diesel generator startup signal)

CN5:
GND (1): Used for grounding the PE wire of external meter or form a loop circuit with 5V-COM.
Meter-485A/Meter-485B (2,3): Communication port for external meter.
485A/485B (4,5): reserved.
5V (6): Supply 5V DC for external device,such as Smart TX.

WIFI interface:Interface for installing the stick logger, not limited to WIFI logger, there is also 4G option available.

2.2.2 MPPT Function Port Definition

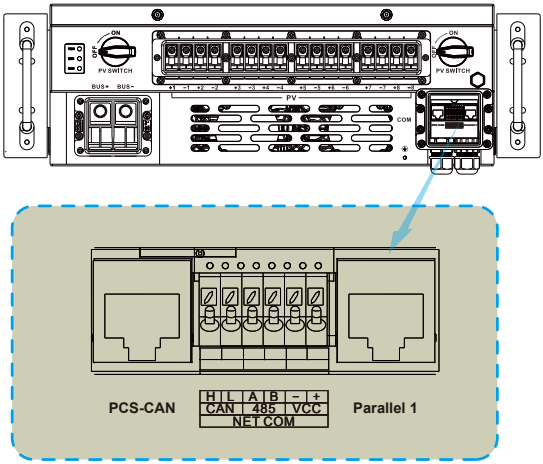

Note:
For MPPT communication port cable definitions, refer to Appendix 1, Chapter 9.

PCS-CAN: Communication port between MPPT and PCS Module
Parallel 1: Same as PCS-CAN port, it is in parallel together, reserved for future use.
CAN: CAN H, CAN L , commissioning port for CAN box so that our engineers can get original data like hex format from MPPT module
485: 485A,485B, it is used to communicate with upper computer software via modbus protocol so that our engineers can get real-time data from MPPT module
VCC: VCC+, VCC- 12V power supply for external upgrading module from Deye.
Note: For MPPT communication port cable definitions, refer to Appendix 1, Chapter 9.

2.2.3 STS Function Port Definition

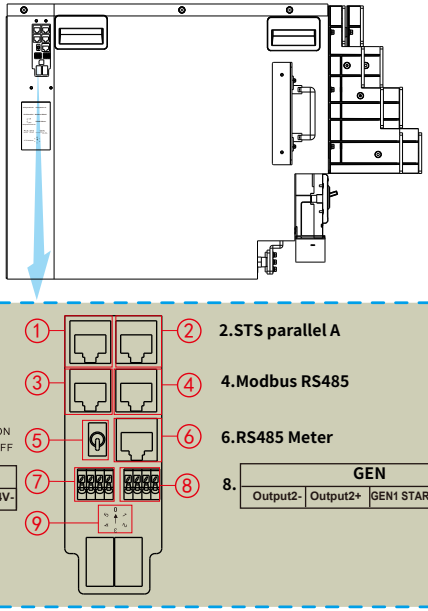

Note:
For STS communication port cable definitions, refer to Appendix 1, Chapter 9.

STS parallel A: STS modules in Parallel Port A.
STS parallel B: STS modules in Parallel Port B.
PCS Parallel: Communication Port between PCS and STS.
(Note: If using Ethernet cable, ensure the communication distance between STS and PCS is less than 10 meters.)
Modbus RS485: Communication Port for Upper Computer Software.
RS485 Meter: Communication Port for external electricity meter.
STS Address: Set STS address on parallel STS modules.
STS Parallel Resistor: OFF: Disable Matching Resistance; ON: Enable Matching Resistance.
PCS STS: There are sets of 2 cables. One set of 2 cables(+24V,-24V) from PCS is used for power supply of STS module, the other set of 2 cables(+24V,-24V) is used for 24 V power supply for parallel connection between STS units.
GEN: Dry contact for generator start(GEN1 START-, GEN START+) and external devices control (Output2-, Output2+).

Note:

1. STS Device Addressing Rules

➢ **Single STS Operation:** The STS address DIP switch can be set to 0 (default)or 1.

➢ **Multiple STS Parallel Operation:**

Master STS: The address DIP switch must be set to 1.

Slave STS: Address DIP switches shall be set to sequentially incremented values (e.g., 2, 3, 4, 5).

2. Parallel Resistor Configuration Rules (PCS/STS System)

Core Principle: Resistors are configured only on devices at both ends of the communication link.

➢ **Scenarios with STS**

Configuration	①STS Resistor Setting	②PCS Resistor Setting
Single STS unit	Enable	Disable
Parallel STS units	Enable at both ends (1 unit or 2 units per end)	Disable

➢ **Scenarios without STS (PCS Parallel Only)**

Total PCS Units	②PCS Resistor Setting	Diagram
⩽3 units	Disabled	—
＞3 units	1 unit enabled at each end	•—┬┬—•
⩾5 units	2 units enabled at each end	••—┬┬—••
⩾10 units	3 units enabled at each end	•••—┬┬—•••
⩾15 units	4 units enabled at each end	••••—┬┬—••••
＝20 units	5 units enabled at each end	•••••—┬┬—•••••

• = Device with enabled resistor
┬ = Communication cable
— = Devices without enabled resistor

①Please refer to 2.2.3 STS Function Port (STS Parallel Resistor)
②Please refer to 2.2.1 PCS Function Port (S1)

2.3 Product Size

2.3.1 PCS Product Size

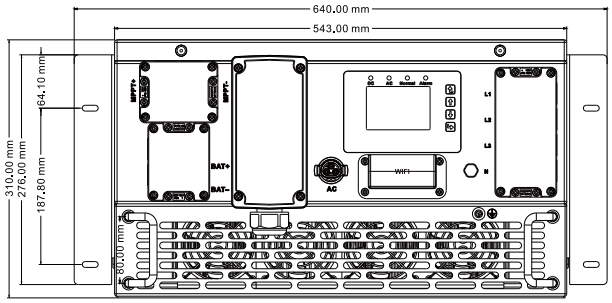

Front size of PCS

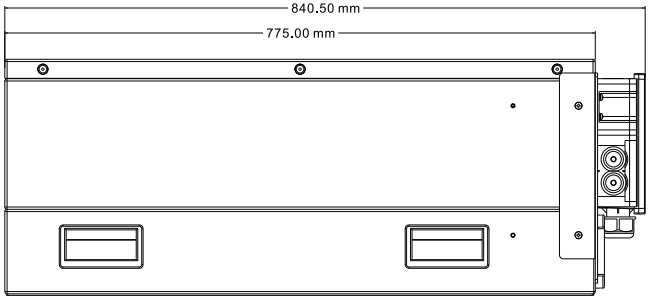

Side size of PCS

2.3.2 MPPT Product Size

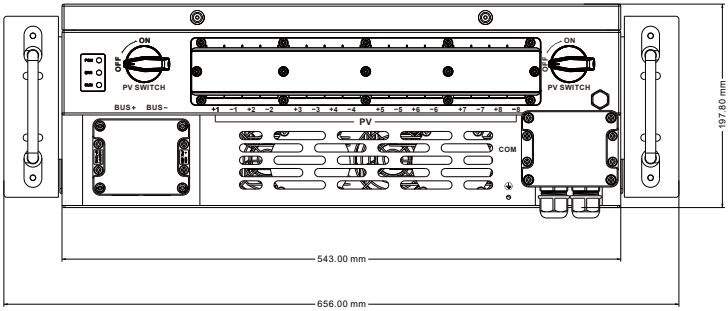

Front size of MPPT

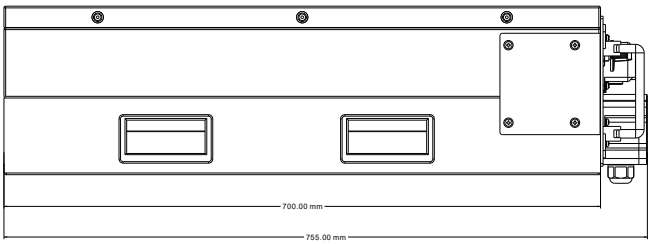

Side size of MPPT

2.3.3 STS Product Size

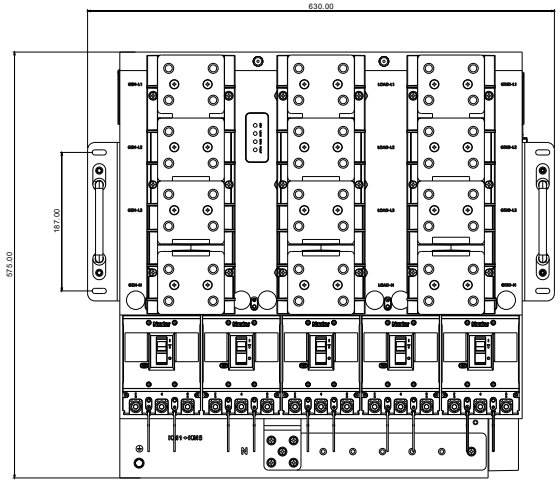

Front size of STS

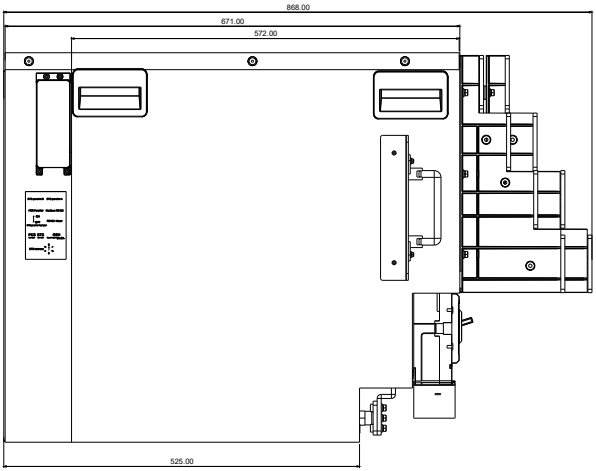

Side size of STS

2.4 Product Features

- 230V/400V Three-phase pure sine wave PCS.
- Self-consumption and feed-in to the grid.
- Auto restart while AC is recovering.
- Programmable supply priority for battery or grid.
- Multiple optional operating modes：Only PCS mode, PCS+MPPT mode, PCS+STS mode, PCS +MPPT+STS mode.
- Configurable battery charging current/voltage based on applications by LCD setting.
- Configurable AC/Solar/Generator Charger priority by LCD setting.
- Compatible with mains voltage or generator power.
- Overload/over temperature/short circuit protection.
- Smart battery charger design for optimized battery performance
- Includes limit function, prevent excess power overflow to the grid.
- Supports remote monitoring via APP or webpage when connected with 4G/Wi-Fi stick logger
- Time of use function.

2.5 Basic System Architecture

The following diagram shows basic application of energy storage system built by this PCS module. It usually includes following devices to have a complete photovoltaic energy storage system：

-PCS module
-STS module
- Generator or Utility Grid
-MPPT module
- PV Array
-Battery set

The other optional system architecture can be found in the Chapter 3.12.

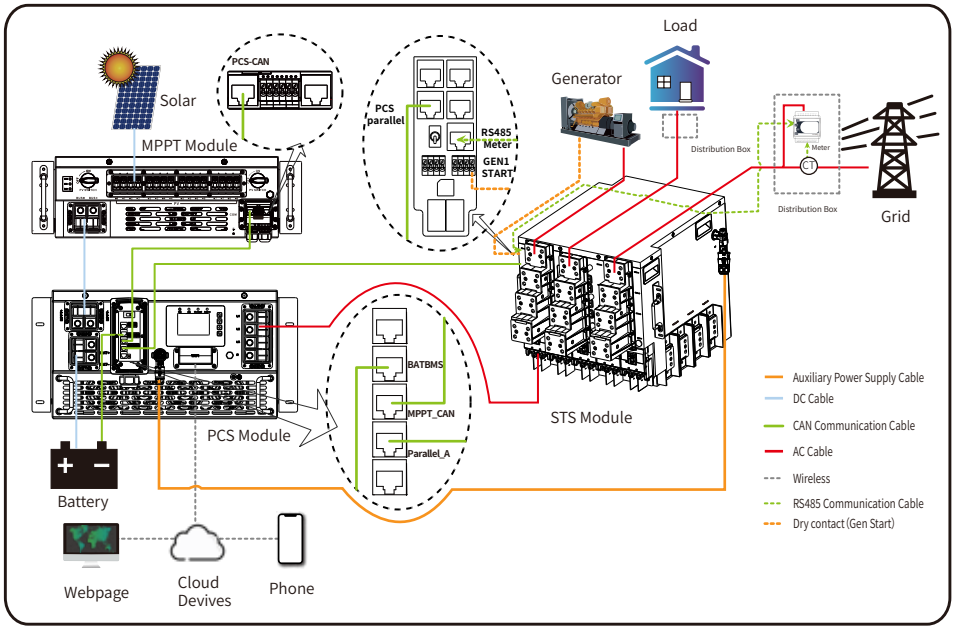

2.6 Storage Requirements

NOTICE

- Store PCS modules and MPPT modules according to the storage requirements. Device damage caused by unqualified storage conditions is not covered under the warranty.
- Do not store PCS modules and MPPT modules without outer packaging.
- Do not tilt a packing case or place it upside down.

If PCS modules and MPPT modules will not be put into use immediately, store them according to the requirements specified in this section. Device damage caused by unqualified storage conditions is not covered under the warranty. Store PCS modules and MPPT modules with outer packaging in a ventilated, dry, and clean indoor environment. In addition, ensure that the following requirements are met:

- If PCS modules and MPPT modules are unpacked but will not be used immediately, put them back to the original packaging with the desiccant, and seal with tape.
- When temporarily storing PCS modules and MPPT modules outdoors, do not stack them on a pallet. Take rainproof measures such as using tarpaulins to protect PCS modules and MPPT modules from rain and water.
- PCS modules and MPPT modules must be stored in a clean and dry environment with appropriate temperature and humidity. The air must not contain corrosive or flammable gases. Maintain a storage temperature between –40°C to +70°C, and humidity between 5%–95% RH.
- A maximum of four Smart PCSs can be stacked. To avoid personal injury or device damage, exercise caution when stacking PCS modules and MPPT modules to prevent them from falling over.
- Do not remove the outer packaging. Check the packaging regularly (recommended: once every three months). Replace any packaging that is damaged during storage.
- Do not store PCS modules and MPPT modules for more than two years. If PCS modules and MPPT modules have been stored for two years or longer, they must be checked and tested by professionals before being put into use.
- If the PCS module has not been running for six months or longer after being mounted, it may fail and must be checked and tested by professionals before being put into operation.

3. Installation

3.1 Parts List

3.1.1 PCS Parts List

Check the equipment before installation. Please make sure nothing is damaged in the package. You should have received the items in the following package:

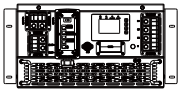

PCS Module
x1



User manual x1



M6×14
x12



Communication cable x1

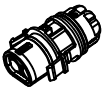

3-pin male connector x1



M4×12
x2

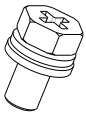

M8×16
x1

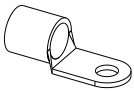

OT terminals RNBS70-8
x6

3B



Support Plate 1x1

3B



Support Plate 2x1

1L

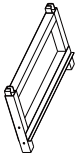

Left frame x1

1R

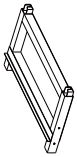

Right frame x1

2F&2B



Front and back
crossmembers x2

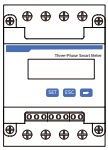

Meter(optional)*
x 1

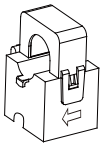

Sensor clamp(optional)*
x 3

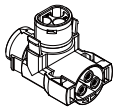

T-type AC connector
x1

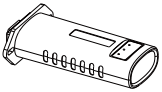

Data logger(optional)* x1

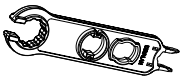

Solar Photovoltaic
Connector Special
Spanner x1



Dust Plug x1



female connectorx1

*Note: Please confirm whether you need the meter and sensor clamp before placing an order. For data logger, please confirm which kind of communication interface do you need, Wi-Fi/4G are the available options.

3.1.2 MPPT Parts List

Check the equipment before installation. Please make sure nothing is damaged in the package. You should have received the items in the following package:



MPPT Module
x1



User manual x1



M6×14
x12



Communication cable x1

Red connection wire x1



M4×8
x1



OT terminals RNBS8-4
x16

2F&2B



Front and back
crossmembers
x2

3B



Support Plate 1x1

3B



Support Plate 2x1

1L

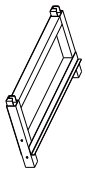

Left frame x1

1R

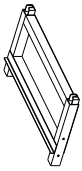

Right frame x1

Black connection wire x1

3.1.3 STS Parts List

Check the equipment before installation. Please make sure nothing is damaged in the package. You should have received the items in the following package:

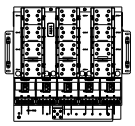

STS Module
x1



User manual x1



M6×14
xN



Communication cable x1



3-pin male connector x1

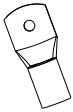

Copper lug xN

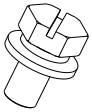

M10x20 xN

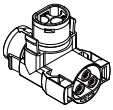

T-type AC connector
x1

3B

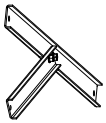

Diagonal support plate x2

2B

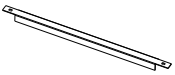

Back crossbeam x2

4F



Front crossbeam x2

5F



Door x1

1R

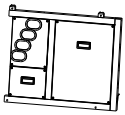

Right door panel
x 1

1L

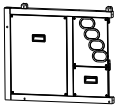

Left door panel
x 1

6T

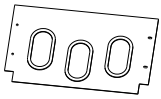

Bracket Cover Plate x1

7F



Acrylic glass Plate 1 x1

8F

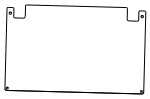

Acrylic glass Plate 2 x1

3.2 Mounting Instructions

Site Selection Requirements

Prohibited Installation Areas

・Explosive environments: Avoid areas with blasting agents, fireworks, or flammable materials.
・Corrosive environments: Do not install near sulfuric acid, hydrochloric acid, nitric acid, hydrogen sulfide, or chlorine, as corrosion damage is not covered under warranty.
・High-risk areas: Avoid locations with strong vibration, noise, electromagnetic interference (≥ X Gauss), or near antennas.
・High-voltage risk zones: Keep away from easily accessible areas to prevent accidental contact and burns.
・Poor ventilation areas: Ensure good airflow to prevent overheating and power loss.
・Noise-sensitive locations: Keep a safe distance from residential areas, offices, and schools (≥ X meters).

Installation Requirements

・Sheltered placement: Protect from direct sunlight, rain, snow, and lightning.
・Solid foundation: Ensure the surface can support the PCS module's weight.
・Public areas: If installed in public spaces (e.g., parking lots, stations, factories), use protective barriers and warning signs.
・Electrical safety: Insulate unused DC cables, route AC/DC power cables vertically to prevent terminal stress damage.
・Salt-affected regions: If near the coast (≥ X meters), consult the manufacturer before outdoor installation.

Installations Tools

Installation tools can refer to the following recommended ones. Additionally, use other auxiliary tools as need on site.


Protective goggles

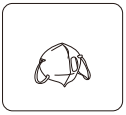
Anti-dust mask

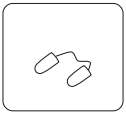
Earplugs


Work gloves


Work shoes

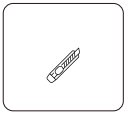
Utlity Knife

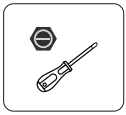
Slotted screwdriver


Cross screwdriver

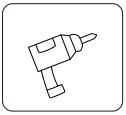
Percussion drill

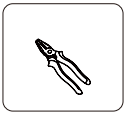
Pliers


Marker


Level


Rubber hammer

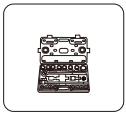
socket wrenches set

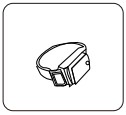
Anti-static wrist strap


Wire cutter

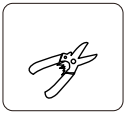
Wire stripper

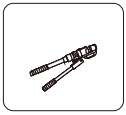
Hydraulic pliers

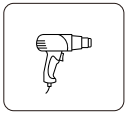
Heat gun

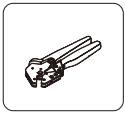
Crimping tool4-6mm²

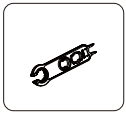
Solar connector wrench


Multimeter ⩾1100 Vdc

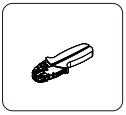
RJ45 crimping plier


Cleaner


Spanner

3.3 Product Handling Requirements

Lift the PCS module and MPPT module(if any) out of the packaging box and transport them to the designated installation location.

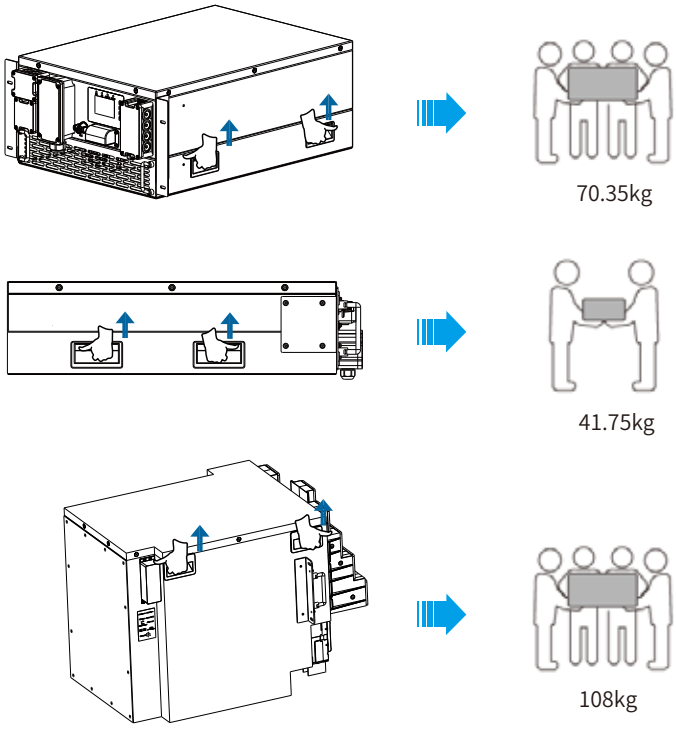

transport

CAUTION:

Improper handling may cause personal injury!

- Arrange an appropriate number of personnel to carry the PCS module , MPPT module (if any) and STS module (if any) according to their weight, and installation personnel should wear protective equipment such as anti-impact shoes and gloves.
- Placing the PCS module , MPPT module (if any) and STS module (if any) directly on a hard ground may cause damage to their metal enclosure. Protective materials such as sponge pad or foam cushion should be placed underneath the PCS module , MPPT module (if any) and STS module (if any) .
- Move the PCS module , MPPT module (if any) and STS module (if any) by four or five people or by using a proper transport tool.
- Move the PCS module , MPPT module (if any) and STS module (if any) by holding the handles on them. Do not move the device byholding the terminals.

Mounting The PCS Module And MPPT Module(If Any)

Remember that this PCS module is heavy! Please be careful when lifting out of the package.
Follow the steps below to install the PCS module:
1. Attach the front and back crossmembers to the left and right frames.
2. Secure the back inclined brace to the left and right frames.
3. Place the PCS module into the assembled bracket.
4. Use the screws from the accessory kit to fasten the hanging ears on both sides of the front of the PCS module to the bracket, completing the installation.

PCS Bracket Component Diagram

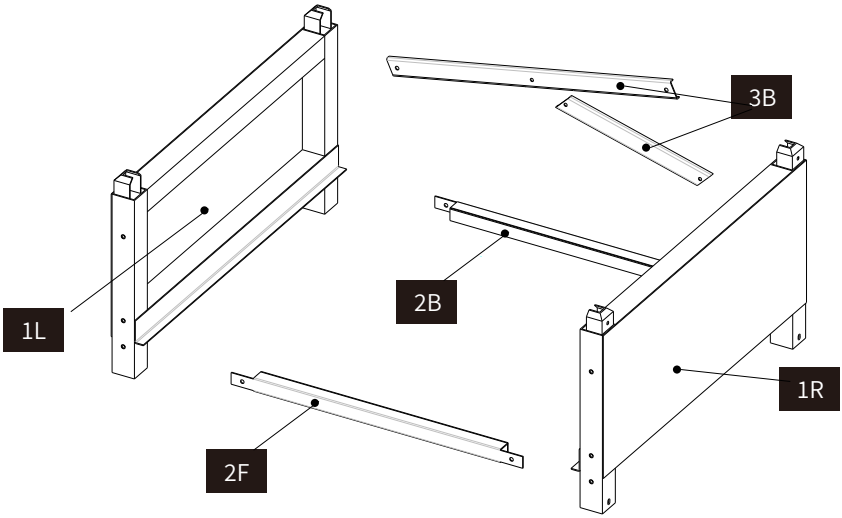

Component	Description
1L	Left frame
1R	Right frame
2F	Front crossmember
2B	Back crossmember
3B	Support Plate

Note: The abbreviations **T, B, F, R, L** are used throughout this manual to indicate standard orientations relative to the device:

Direction Indicators
"T" = Top; "B" = Back; "F" = Front; "R" = Right; "L" = Left;
Right/Left are defined when facing the Front (F).

PCS Mounting Bracket Installation

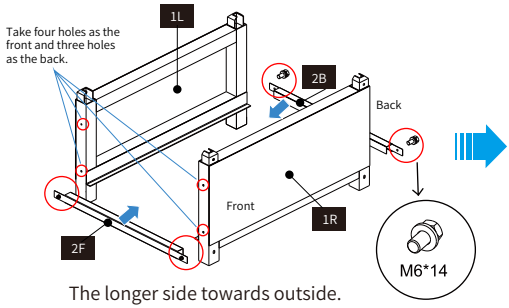

The longer side towards outside.

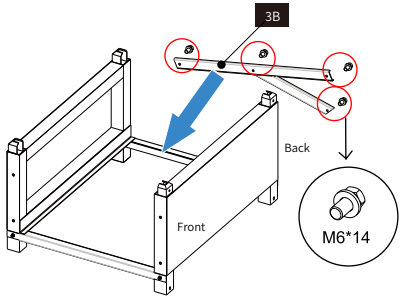

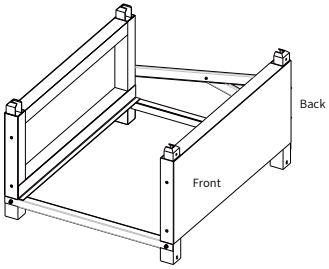

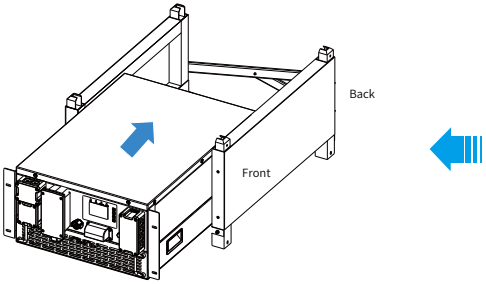

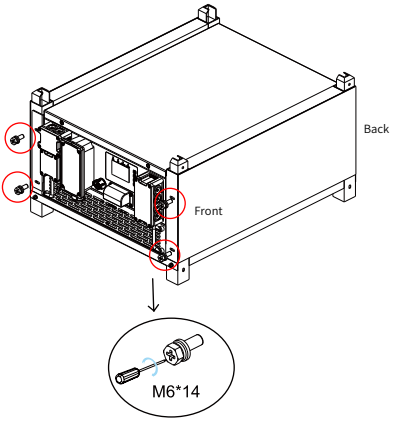

MPPT Bracket Component Diagram

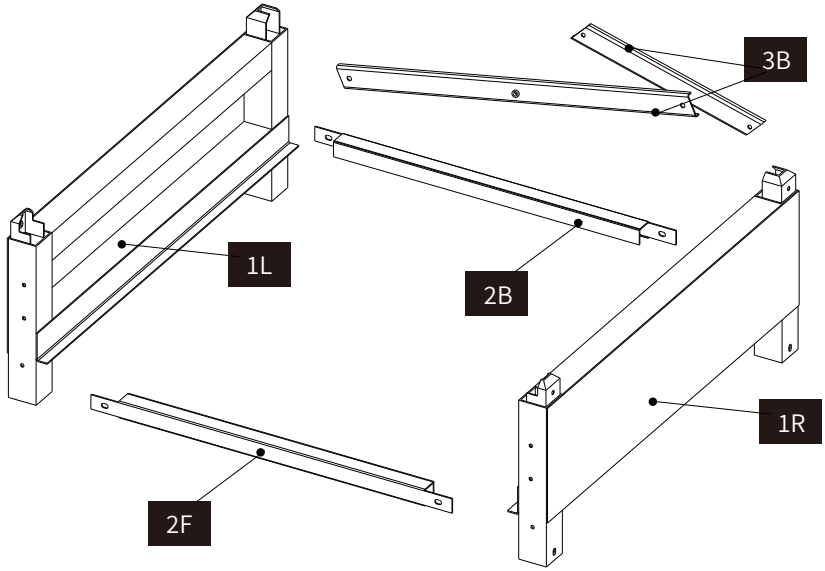

Component	Description
1L	Left frame
1R	Right frame
2F	Front crossmember
2B	Back crossmember
3B	Support Plate

Note: The abbreviations **T, B, F, R, L** are used throughout this manual to indicate standard orientations relative to the device:

Direction Indicators
"T" = Top; "B" = Back; "F" = Front; "R" = Right; "L" = Left;
Right/Left are defined when facing the Front (F).

MPPT Mounting Bracket Installation

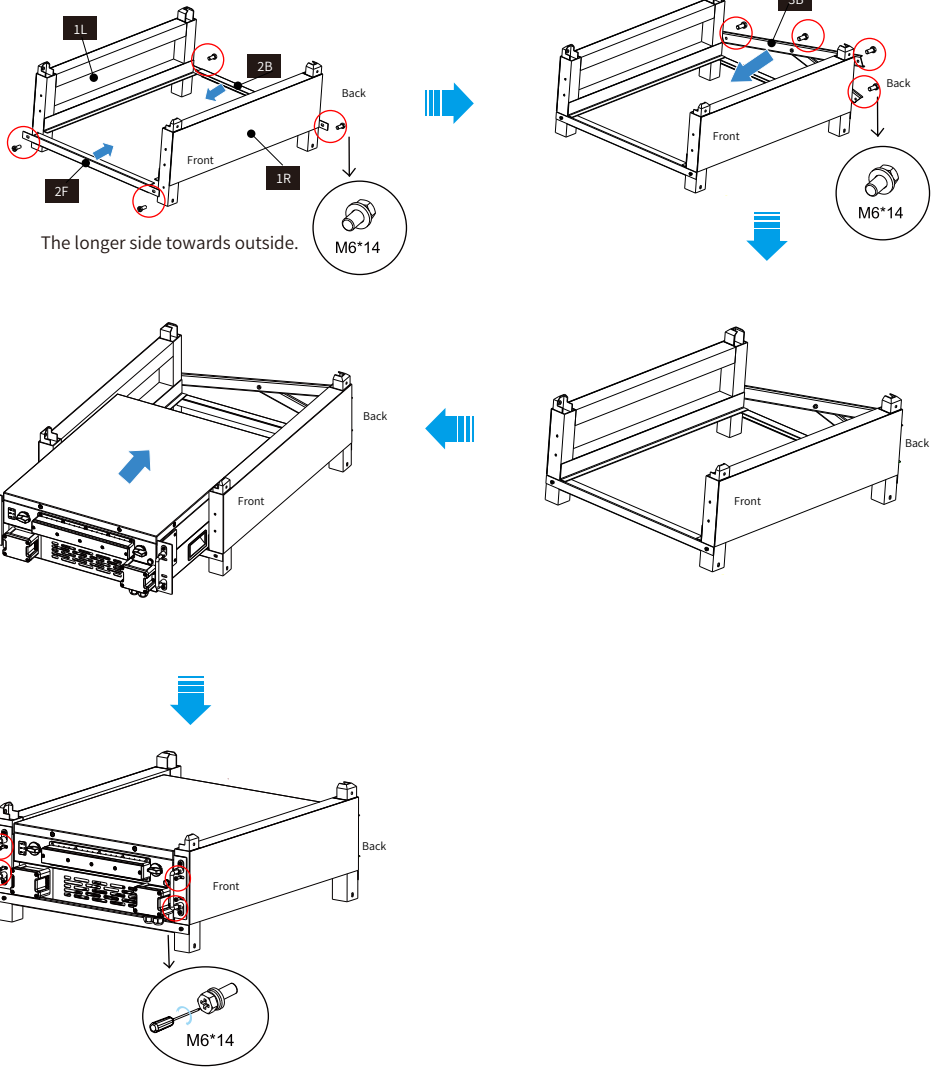

STS Mounting Bracket Installation

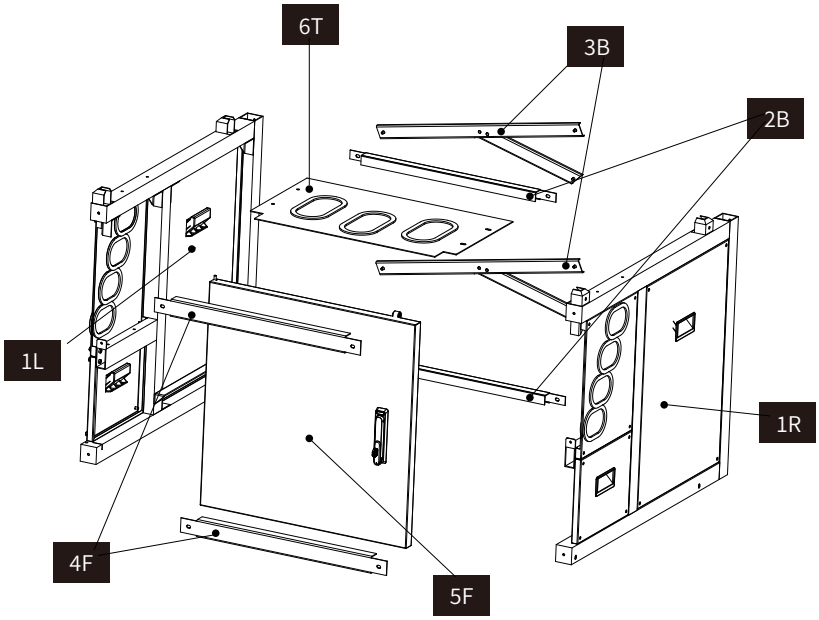

Component	Description
1L	Left door panel
1R	Right door panel
2B	Back crossbeam
3B	Diagonal support plate
4F	Front crossbeam
5F	Door
6T	Bracket Cover Plate

Note: The abbreviations **T, B, F, R, L** are used throughout this manual to indicate standard orientations relative to the device:

Direction Indicators
“T” = Top; “B” = Back; “F” = Front; “R” = Right; “L” = Left;
Right/Left are defined when facing the Front (F).

STS Mounting Bracket Installation

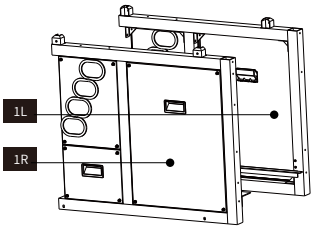

Take out the M6x14 screws from the accessory kit and install the STS bracket.

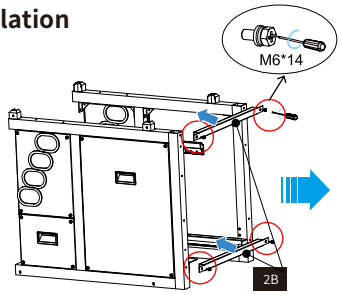

Install the rear crossbeam from top to bottom in sequence.

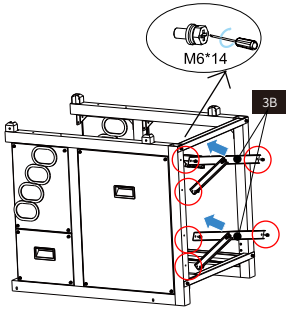

Install the diagonal support plates from top to bottom in sequence.

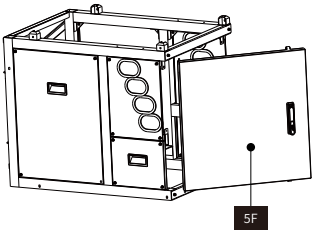

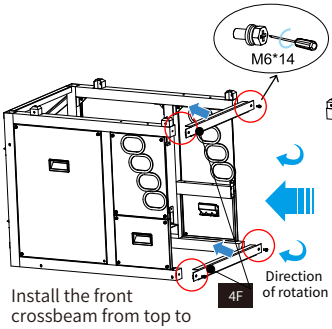

Install the front crossbeam from top to bottom in sequence.

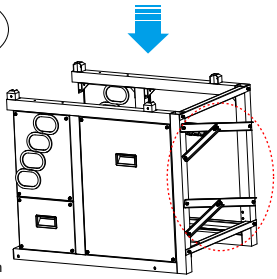

Installation of diagonal support plates completed

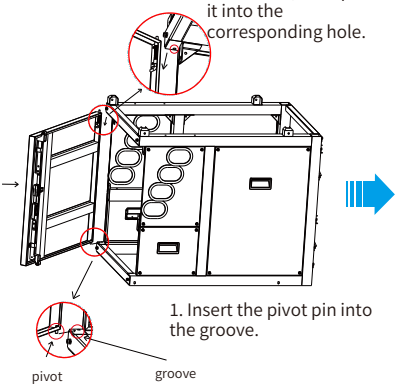

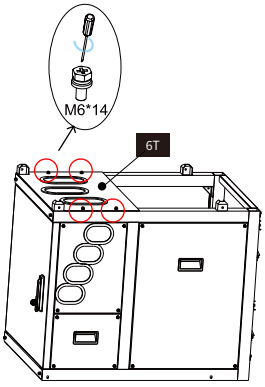

Install the bracket cover plate.

PCS+MPPT+STS Mounting Bracket Installation

1. Framework Construction

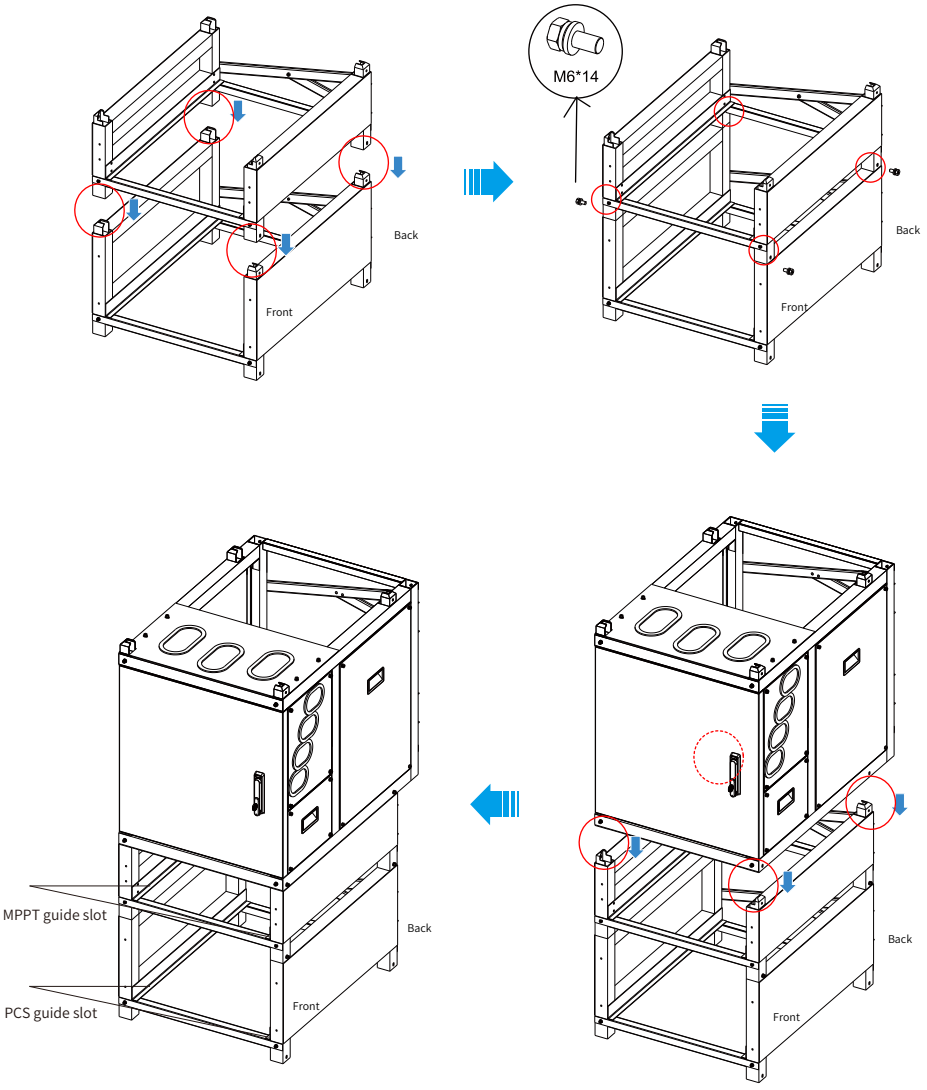

PCS+MPPT+STS Mounting Bracket Installation

2. PCS And MPPT Installation

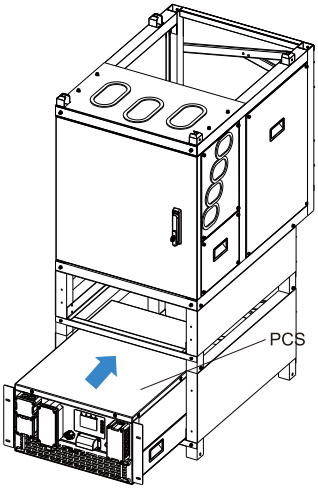

Transport the PCS and place the body onto the frame guide slot. Push the body into the frame along the guide slot. Secure the side mounting ears to the frame with screws.

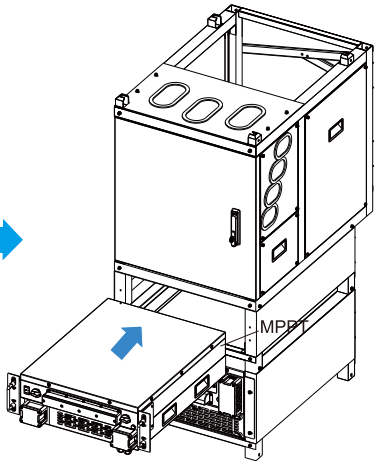

Transport the MPPT and place the body onto the frame guide slot. Push the body into the frame along the guide slot. Secure the side mounting ears to the frame with screws.

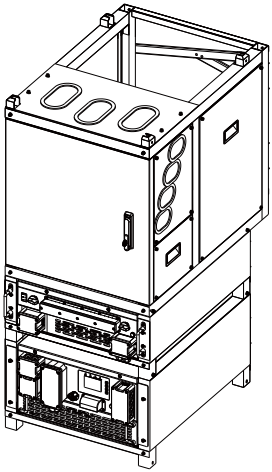

PCS+MPPT+STS Mounting Bracket Installation

3. STS Installation

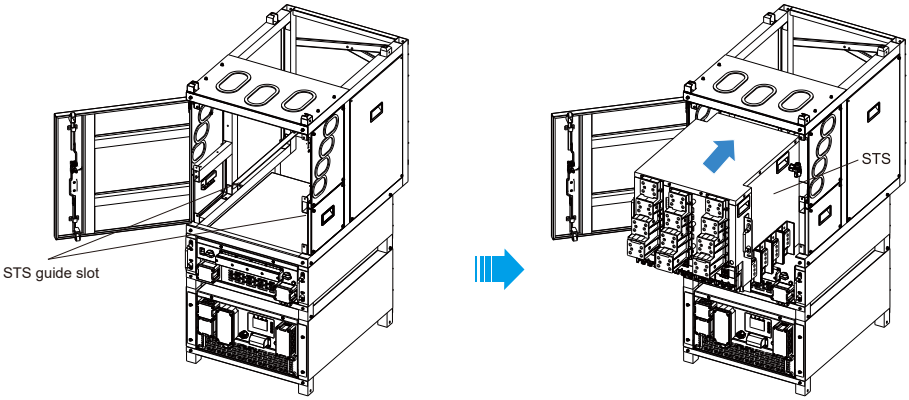

Open the installed cabinet door, transport the STS, and place the body onto the frame guide slot. Push the body into the frame along the guide slot. Secure the side mounting ears to the frame with screws.

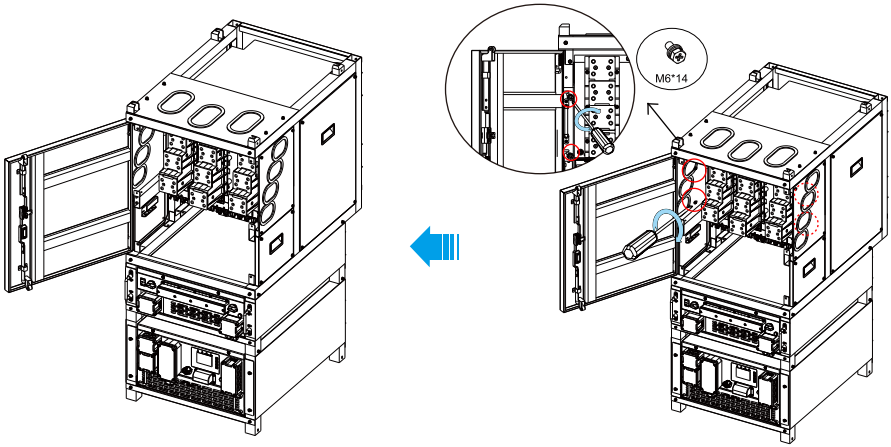

There are four screws here, two on each side,Use a screwdriver to tighten 4 screws.

PCS+MPPT+STS Mounting Bracket Installation

4. STS Acrylic Panel Installation

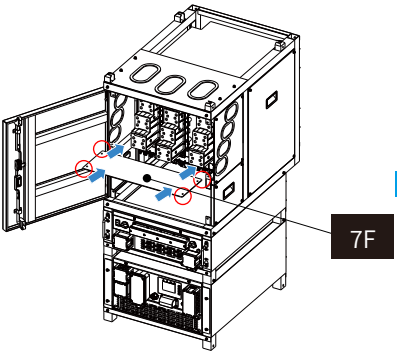

Install the lower acrylic panel,
the organic glass panel is black.

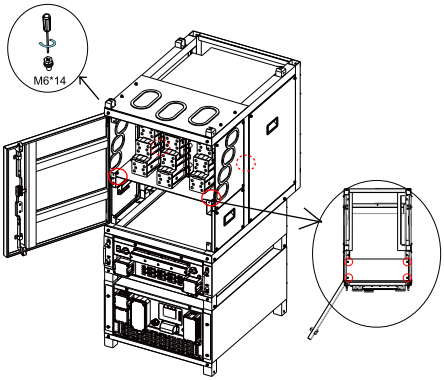

There are four screws here, two in
the front and two in the back, Use a
screwdriver to tighten 4 screws.

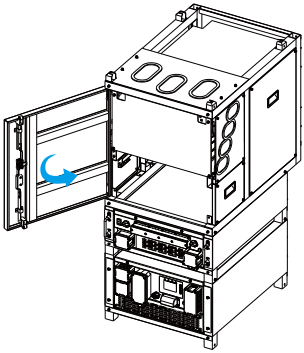

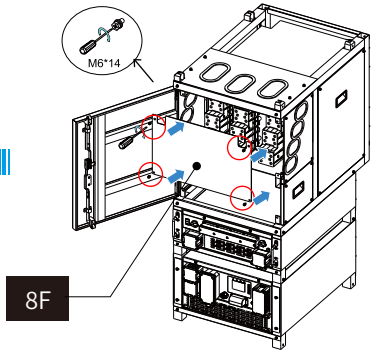

Install the front acrylic panel
and secure it with screws, Use
a screwdriver to tighten 4 screws.

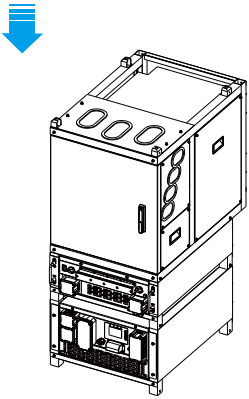

***Note: The communication cable between STS and PCS should not exceed 10M.**

3.4 Battery Connection

For safe operation and compliance, a separate DC over-current protector or disconnect device is required between the battery and the PCS module. If the battery is integrated with a readily accessible internal DC breaker, no additional DC breaker is required.

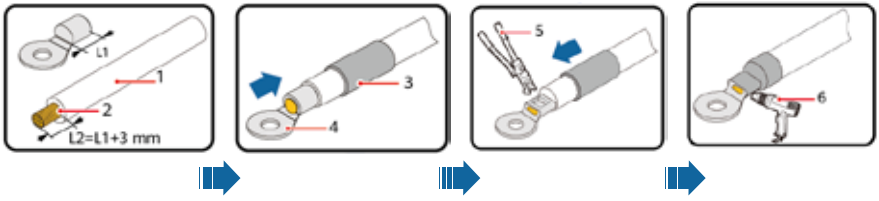

(1) Cable (2) Core (3) Heat-shrink tubing (4) OT terminal (5) Hydraulic pliers (6) Heat gun

Chart 3-1Crimping an OT terminal

Crimping an OT Terminal

1. Strip the Cable Insulation: Remove the insulation layer from the positive and negative power cables of the battery set. Strip an appropriate length according to the depth of the OT terminal's wire inlet.
2. Prepare for Crimping: Slide a piece of heat-shrink tubing over the end of the battery power cable, then fully insert the exposed wire core into the OT terminal's wire inlet.
3. Crimp the Terminal: Use the appropriate hydraulic pliers to crimp the OT terminal securely onto the wire core. Then, slide the heat-shrink tubing toward the OT terminal, ensuring it covers the entire wire inlet.
4. Heat-Shrink the Tubing: Use a heat gun to shrink the tubing, ensuring it is securely in place to prevent movement.
5. Secure the Connection: Using an Allen wrench, fasten the OT terminals of the positive and negative power cables to the BAT input terminals of the PCS, following the polarity markings. Then Connect the BMS port of PCS and the corresponding interface of the battery control box with the communication cable in the package of battery control box. If multiple sets of batteries are connected in parallel, only the control box of master battery need to communicate with PCS.

There are two different application scenarios, as detailed below:

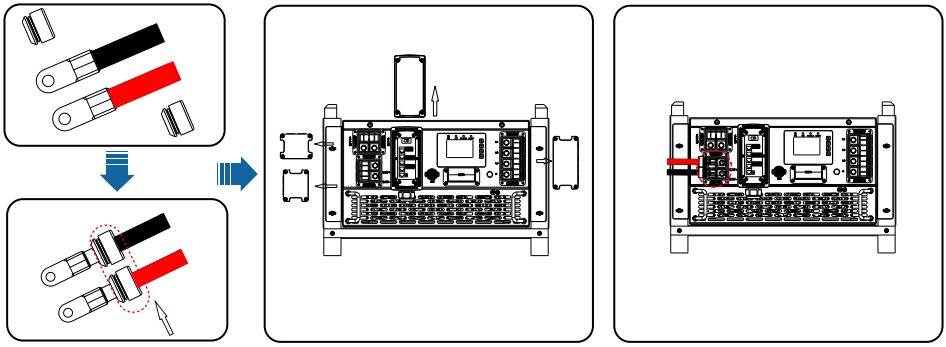

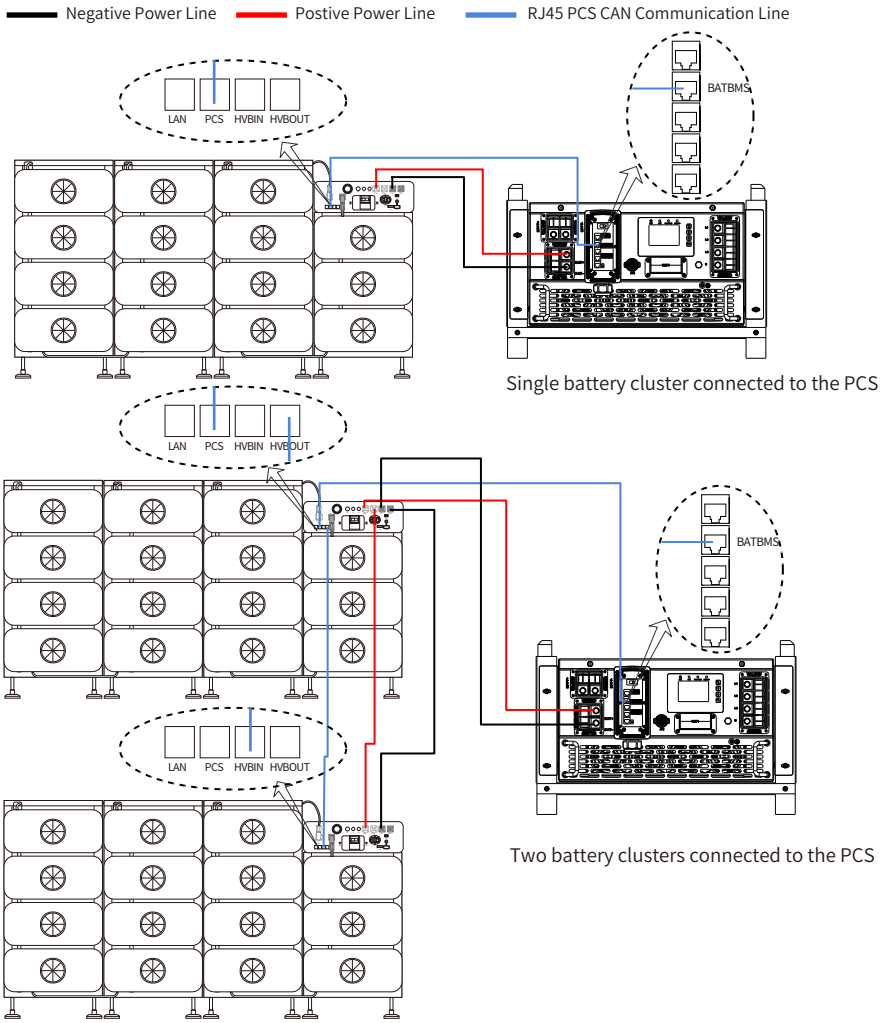

Safety Hint:
Please use approved DC cable for battery system.

Model	Wire Size	Cross section（mm^2）
SUN-100K-PCS01HP3	3/0AWG	70mm^2
SUN-125K-PCS01HP3	4/0AWG	95mm^2

Chart 3-2

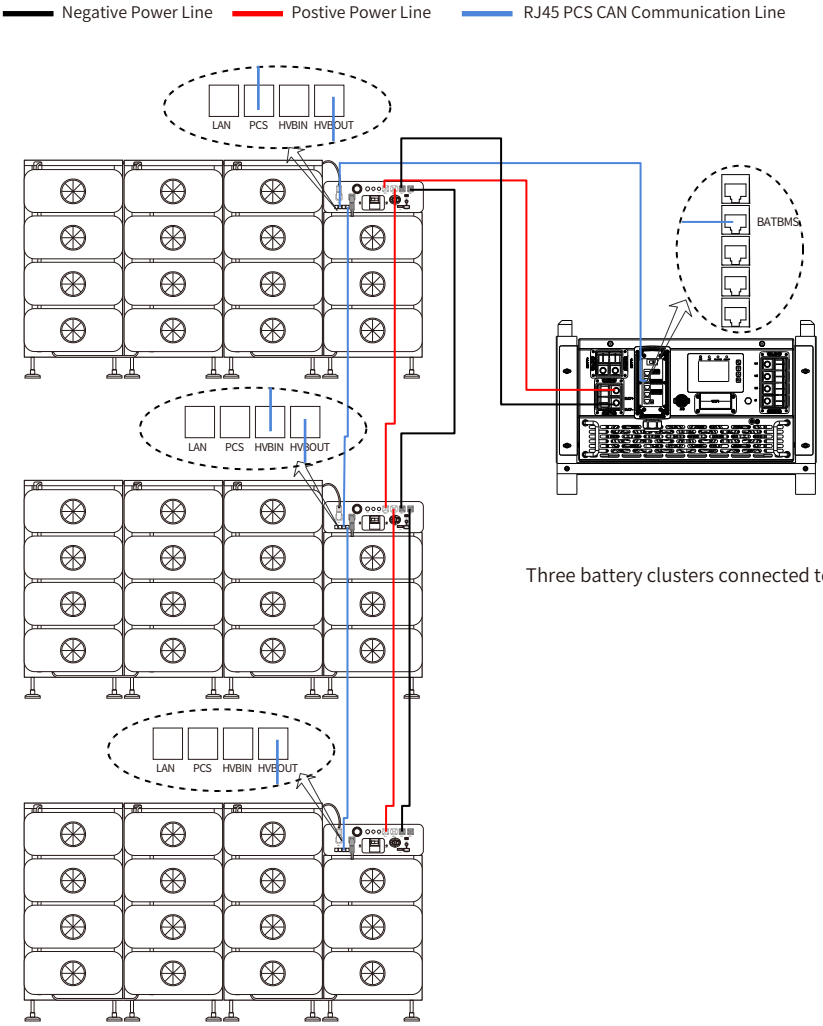

Three battery clusters connected to the PCS

Note:
If the number of batteries connected in parallel exceeds three, the daisy-chain connection method must not be used. Instead, the user must install a DC busbar, with all parallel-connected batteries terminating at the busbar for current consolidation before connecting to the PCS.

3.5 AC Cable Connection

There are two kinds of scenarios:
(1)Without STS module: Before connecting to the grid, a seperate AC breaker must be installed between the PCS module and the grid.

Step1: Install a AC breaker between this PCS module and the main power, the specification of AC breaker has been recommended in the table below.
Step2: Turn off that AC breaker, and then connect the 4 core AC cable of recommended specification to the output terminals of AC breaker.
Step3: Use the RNB60-8 terminals to crimp the other end of that 4 core AC cable， please refer to the Chart 3-1 for the details of crimping.
Step4: Connect the 4 core AC cable to the AC port of PCS module according to the polarity mark.

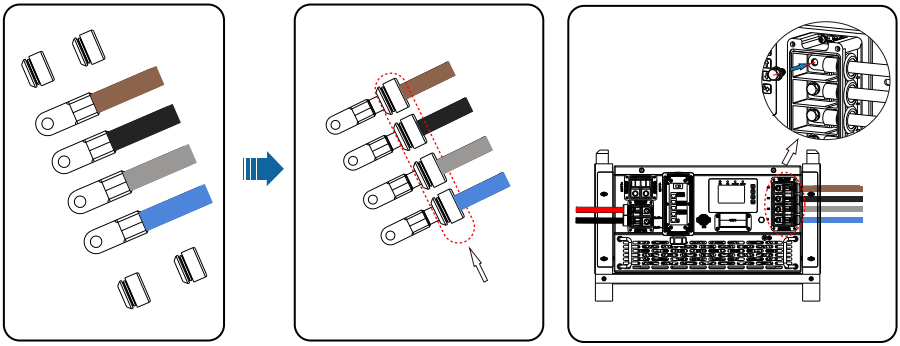

Model	Recommended AC breaker
SUN-100/125K-PCS01HP3	225A/400V

Chart 3-3 Recommended specification of external AC breaker

Note:
In final installation,a breaker certified according to IEC 60947-1 and IEC 60947-2 shall be installed with the equipment.
All wiring must be performed by a qualified personnel.It is very important for system safety and efficient operation to use appropriate cables for AC input connection. To reduce risk of injury, please use the proper recommended cables as below. This cable specification is recommended based on the Max.AC output current 166.7A. You can also select the proper specification of cable based on the maximum output current of real application scenario and remember to obey the local regulations.

Model	Wire Size (AC Output)	Cross section (mm²)	Torque value (max)
SUN-100K-PCS01HP3	3/0AWG	70	28.2N・m
SUN-125K-PCS01HP3	4/0AWG	95	28.2N・m

Chart 3-4 Recommended cable

2) With STS Module: The STS module has a built-in 250A AC breaker for connecting the AC cable of the PCS module. Furthermore, the STS module includes a 3-core AC connector, which connects to the 3-core AC connector of the PCS module to supply auxiliary AC power to the PCS module.

PCS Connection Diagram

Step 1: Unscrew the four fixing screws on the plastic cover of the PCS module's AC port and remove the cover.
Step 2: Crimp the four AC wires with RNB60-8 terminals following the steps in Chart 3-1, then thread the wires through the inlet, ensuring proper polarity according to the nearby polarity markings.
Step 3: Secure the crimped terminals with screws, then reinstall the plastic cover and fasten it using the previously removed screws.
Step 4: Cut the 4-core AC cable to an appropriate length, ensuring it is long enough to connect to the STS module. Then, following the steps in Chart 3-1, crimp the other end of the 4-core AC cable with SC95-12 terminals.
Step 5: Connect the L1, L2, and L3 wires to one of the AC breakers at the bottom of the STS module, and connect the N wire to the N-bar of the STS module, as shown in the figure below.
Step 6: Use the 40A male and female connectors included in the package, along with a 3-core AC cable (1 mm^2 / 17 AWG), to assemble properly sized connection cables.
Step 7: Connect the T-type plug and the assembled AC cable to the STS module and PCS module, as shown in the figure on the left.

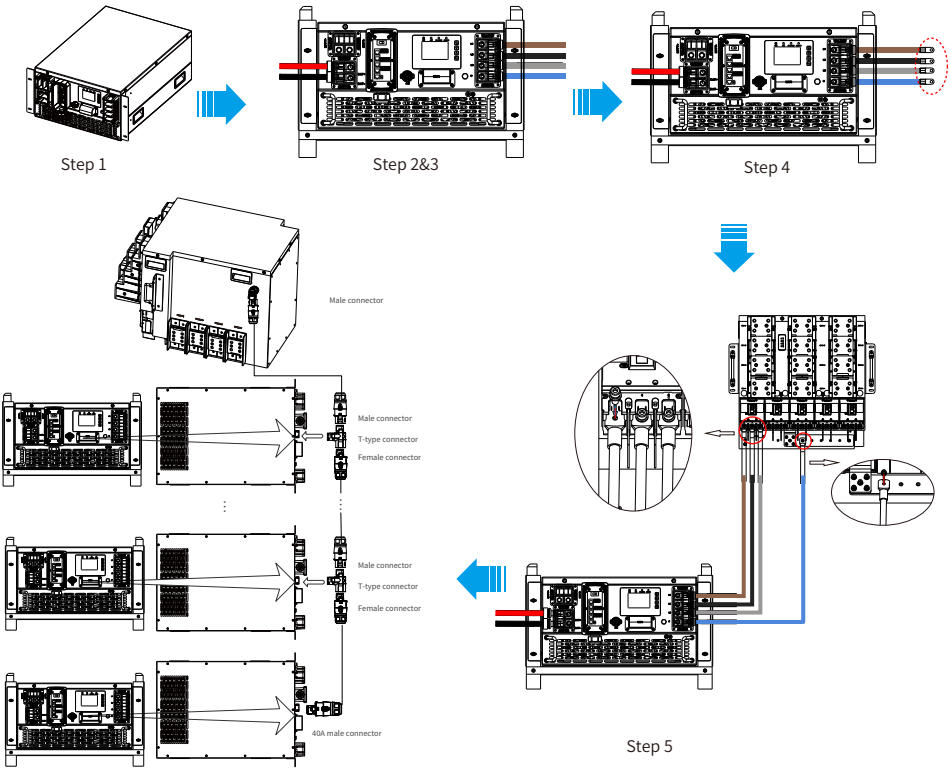

Chart 3-5

Step8:Unscrew the fixed screws of plastic cover of the PCS module's communication port, and then connect the CAN port of the STS module and the idle parallel port of master PCS module with communication cable as shown in the figure 3-6.

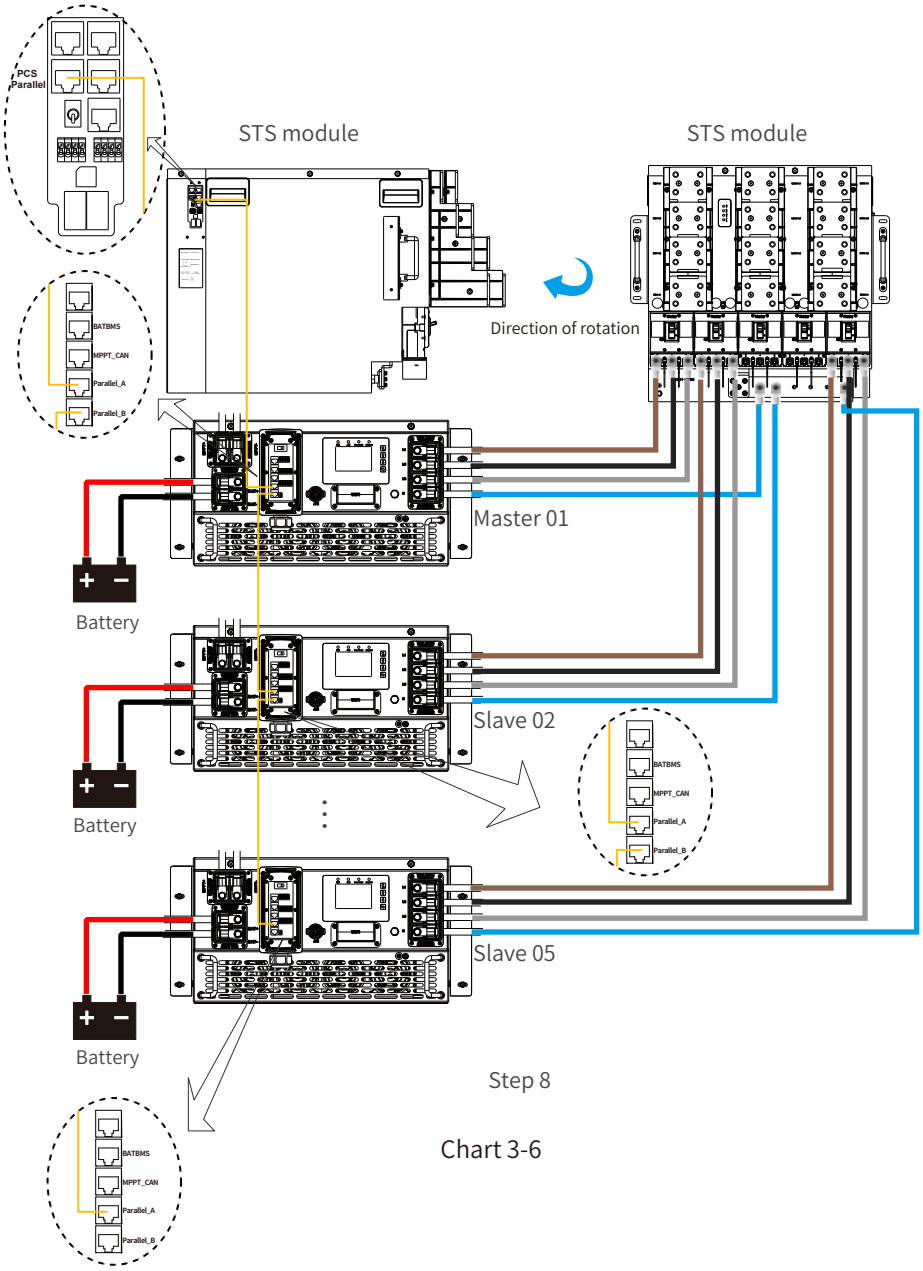

Step 8

Chart 3-6



Be sure that AC power source is disconnected before attempting to wire it to the unit.

3.6 Connection With MPPT Module(Optional)

If you have not paired the PCS module with an MPPT module, please skip this section. However, if you plan to use the MPPT module together with the PCS module, please read the following instructions carefully to ensure the correct connection between the PCS module and the MPPT module that requires PV string connections.



To prevent malfunctions, do not connect any PV modules with potential leakage current to the MPPT module. For example, grounded PV modules can cause leakage current to the MPPT module. Ensure that the PV+ and PV- terminals of the PV strings are not grounded.



It is required to use a PV junction box with surge protection. Otherwise, strong lightning strikes on the PV modules may damage both the MPPT module and the PCS module.

3.6.1 Connection Of PV Strings

It is recommended to install a DC circuit breaker between the PV strings and the MPPT module to facilitate installation, maintenance, and future repairs.
Before connecting the PV strings to the MPPT module, first switch off the DC switch of the MPPT module and turn off the DC circuit breaker between the PV strings and the MPPT module.
The following are two possible scenarios:



Safety Hint:
Before connection, please make sure the polarity of cables of the PV strings match the "DC+" and "DC-" marks beside the PV inputs of MPPT module



Safety Hint:
Before connecting to the MPPT module, please make sure that the open circuit voltage of PV strings haven't exceeded the max.PV input voltage of the the MPPT module.



Safety Hint:
Please use recommended DC cable for PV system.

Cable type	Range		Recommended value	
	Wire Size	Cross section(mm^2)	Wire Size	Cross section(mm^2)
Industry generic PV cable (model: PV1-F)	13-11AWG	2.5-4	11AWG	4

Chart 3-7

Connect PV Strings To MPPT

Please note that Earth faults are a common issue in solar power plants. Most often, these problems arise due to damage to PV cables during installation or engineering work. Some faults are severe and easy to detect, while others may have minor defects that are harder to identify. These potential earth faults can affect or damage MPPT Module and even lead to the failure of combiner boxes. In extreme cases, an MPPT Module may burn out.
Here, we will explain how to quickly check for earth faults in a PV system using a multimeter.
Testing Principle
The photovoltaic effect refers to the phenomenon where a semiconductor generates an electromotive force when exposed to light. In a PV module, the built-in electric field within the silicon semiconductor drives electrons and holes to opposite sides, thereby generating PV voltage.
In an ideal scenario, the voltage between the positive terminal and earth and the voltage between the negative terminal and earth should be equal, each accounting for half of the total PV voltage at the instant of measurement. However, this voltage is not real but rather a virtual voltage, which will gradually decline to zero.
Since the earth is not directly connected to the positive or negative terminals, when a multimeter is used to measure the voltage, the reading initially appears and then decreases to zero over time due to a discharge process.
Testing Tools
To detect earth faults, you will need:
• A multimeter
• A traditional or electronic megger
Testing Procedure
1. Detecting Earth Faults Using a Multimeter
Step 1: Turn off the MPPT Module and PCS or stop its operation.
Step 2: Disconnect the PV system from the MPPT Module.
Step 3: Place the red probe of the multimeter on the positive PV cable and the black probe on earth. Wait for a moment and record the voltage.
Step 4: Place the black probe on the negative PV cable and the red probe on earth. Wait for a moment and record the voltage.
Interpreting the Results:
• In a normal PV string, the DC voltage between the positive terminal and earth and the negative terminal and earth should each be approximately half of the total PV voltage at the instant of measurement. The initial voltage will then decline to zero.
• In an abnormal PV string, an imbalance voltage will be observed between these two voltage readings, and stable indicating a potential earth fault.

Step 1: Unscrew the fixed screws on the cover of the MPPT module's PV input port. The following steps will be described separately based on two scenarios:
Scenario 1: One Maximum Power Point Tracker (MPPT) input port connects to only one PV string.
Step 2: Refer to Chart 3-1 to crimp the PV+ and PV- cables of the PV string with the RNBS8-4 terminals. Then, thread them into the available inlet of the MPPT module's PV input port, following the polarity indication below.
Step 3: Ensure that the DC switch is in the off position and that the DC voltage between PV+ and PV- is at a safe level. Then, secure the PV+ and PV- cables of the PV string to the terminal block of the MPPT module.

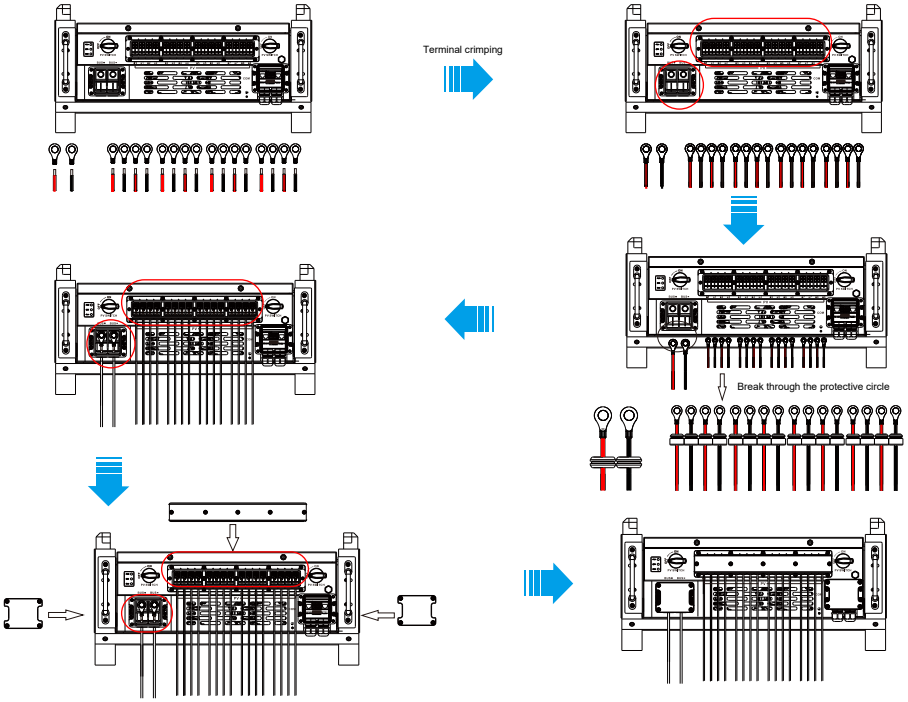

Chart 3-8

Scenario 2: One Maximum Power Point Tracker (MPPT) input port connects to two or more PV strings.
Step 2: Connect two or more PV strings to the same DC combiner box according to actual requirements.
Step 3: Refer to Chart 3-1 to crimp the DC+ and DC- cables on the output side of the DC combiner box with RNBS8-4 terminals. Then, thread them into the available inlet of the MPPT module's PV input port, following the polarity indication below the inlet.
Step 4: Ensure that the DC switch is in the off position and that the DC voltage between DC+ and DC- is at a safe level. Then, secure the DC+ and DC- cables from the DC combiner box to the terminal block of the MPPT module.
Step 5 (for both scenarios): After connecting all the required PV strings, reinstall the cover of the MPPT module's PV input port and secure it with the screws that were previously removed.
Note that an MPPT module may be configured with only Scenario 1, only Scenario 2, or both scenarios simultaneously.

Connection Wire Between MPPT And PCS

Model	Wire Size (DC Output)	Cross section（mm^2）
SUN-MPPT-L01-EU-AM8	4/0AWG	95

Step 1: Unscrew the fixed screws of the MPPT port on the PCS module and remove the plastic cover.
Step 2: Refer to Chart 3-1 to crimp both DC cables with RNBS8-4 terminals.
Step 3: Thread the two DC cables into the inlet of the PCS module's MPPT port and secure the crimped OT terminals to the MPPT port of the PCS module, as shown in Figure 3-9. Then, refer to Chart 3-1 to crimp the other end of these two DC cables with RNBS8-4 terminals.
Step 4: Unscrew the plastic cover of the MPPT module's DC output port, then thread the other end of the PCS module's MPPT input cables into the DC output port of the MPPT module, following the polarity indication next to it.
Step 5: Secure the two crimped OT terminals of these DC cables to the terminal block on the output port of the MPPT module.
Step 6: Unscrew the fixed screws on the cover of the MPPT module's communication terminals. Then, use the communication cable included in the MPPT module package to connect the CAN port of the MPPT module to the MPPT_CAN port of the PCS module, as shown in Figure 3-9.
Step 7: Reinstall the plastic covers on the DC output port and communication port of the MPPT module, as well as the MPPT input port of the PCS module. Secure them with screws.

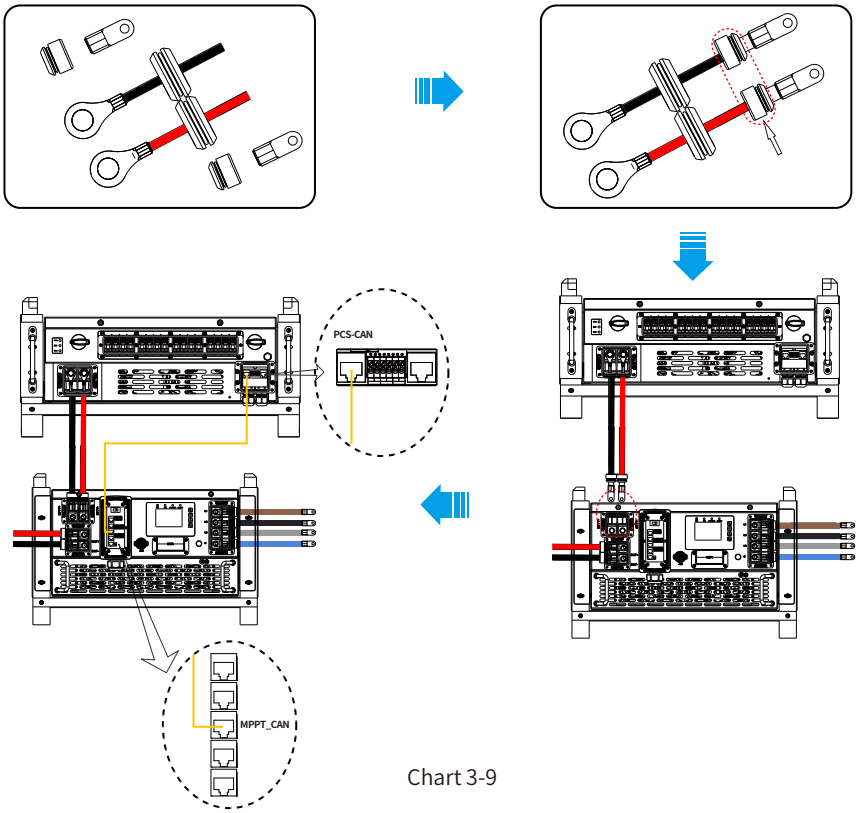

Chart 3-9

AC Cable Installation On STS Module

STS Single Unit Wiring
For a single STS module, cables should enter through the top openings of the STS during installation.
1. Remove the protective covers from the three top openings of the STS.
2. Insert the cables through the top openings of the STS and connect them sequentially to the GEN, LOAD, and GRID copper busbars.
STS Parallel Stack Wiring
Scenario 1: STS Modules Stacked Together
• Cables should be connected through the side openings of the STS modules into the GEN, LOAD, and GRID ports.
• One set of cables should enter the GEN port from the left side, while the other two sets should enter the LOAD and GRID ports from the right side.
• Additionally, the islanded parallel ports on the sides of the two STS modules should be connected. The cables or copper busbars should be inserted from top to bottom and connected to L1, L2, L3, and N terminals.
Scenario 2: STS Modules Installed Horizontally
1. Remove the protective covers from the three top openings of each STS module.
2. Insert the cables through the top openings and connect them sequentially to the GEN, LOAD, and GRID copper busbars.
3. The islanded parallel ports on the sides of the two STS modules should be connected. The cables should be inserted from top to bottom and connected to the L1, L2, L3, and N terminals of the islanded parallel ports on both STS modules.

• STS Single Unit Wiring

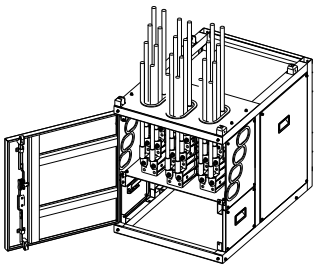

OR

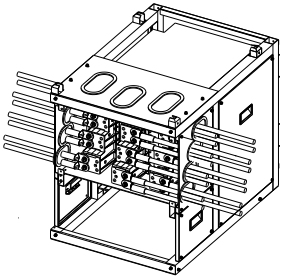

Model	Wire Size (AC Output)	Cross section (mm²)	Torque value (max)
SUN-STS500L	500kcmil + 500kcmil	240	28.2N・m
Note: “500 kcmil + 500 kcmil” means it is recommended to use two 500 kcmil cables for each phase.			

• STS Stacked Parallel Wiring

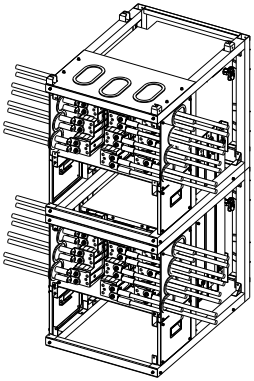

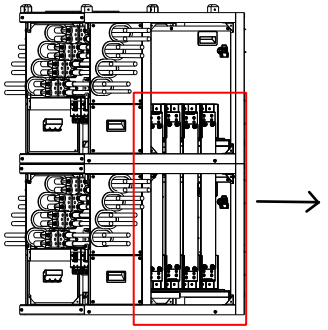

• STS Horizontal Parallel Wiring

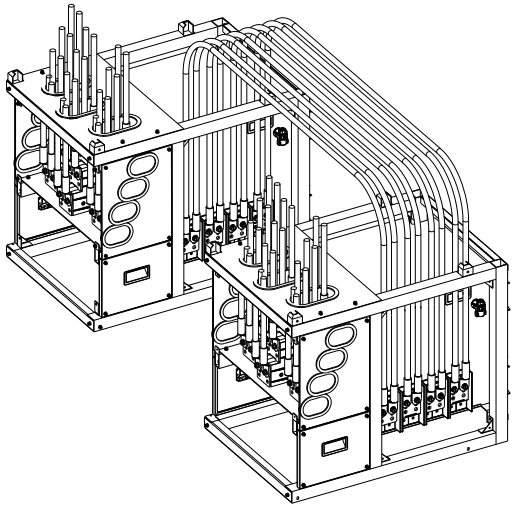

Model	Wire Size (Parallel)	Cross section (mm²)	Torque value (max)
SUN-STS500L	500kcmil + 500kcmil	240	28.2N • m
Note: "500 kcmil + 500 kcmil" means it is recommended to use two 500 kcmil cables for each phase.			

Warning:

When operating PV strings, be aware that exposure to sunlight can generate high voltages. Avoid contact with exposed electrical connectors or terminals to prevent electric shock or injury. For safety, it is best to operate PV strings at night or when PV modules are not exposed to sunlight.

Always turn off the DC breaker or switch before performing any maintenance or adjustments. However, do not turn off the DC breaker or switch when high voltage or high current is present, as this may cause damage or pose safety hazards. Personal safety should always be the top priority.

3.7 Earth Connection(Mandatory)

There is a grounding hole located below the AC input of the PCS module. Ensure that this grounding hole is properly connected to the Earth Bar using an appropriate grounding cable.
Furthermore, if you are installing the MPPT module and STS module, make sure to connect their grounding holes to the same Earth Bar.

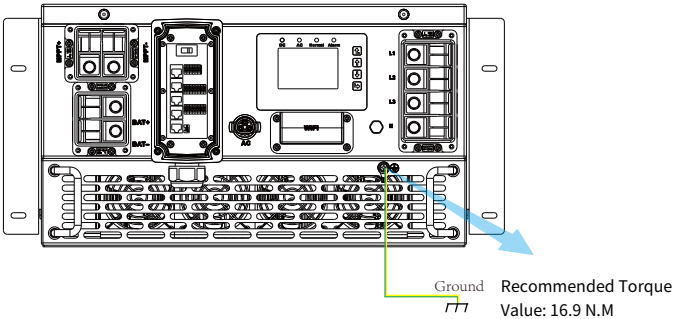

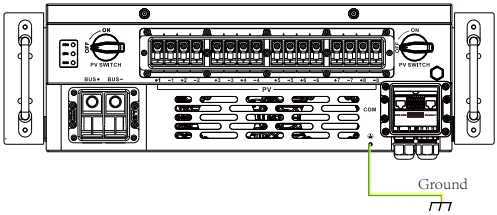

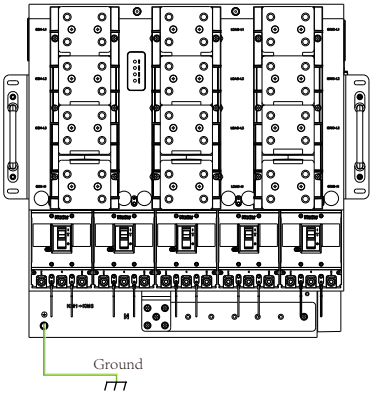

Earth Connection (Copper wires)

Model	Wire Size (PE)	Cross section (mm²)	Torque value (max)
SUN-100/125K-PCS01HP3	0AWG	50	16.9N・m
SUN-MPPT-L01-EU-AM8	0AWG	50	16.9N・m
SUN-STS500L	500kcmil	240	16.9N・m

The conductor should be made of the same metal as the phase conductors.

Warning:

PCS has built-in leakage current detection circuit, The type A RCD can be connected to the PCS for protection according to the local laws and regulations. If an external leakage current protection device is connected to the grid port of PCS, please refer to section 3.11, its operating current must be equal to 1000 mA or higher, otherwise PCS may not work properly.

3.8 Meter Or CT Installation

The Grid side, GEN side, and Load side of the STS module are equipped with sampling circuits. If no home loads are connected to the Grid side of the STS module (i.e., all loads are connected to the Load side), additional CTs or meters are not required.
However, if any home loads are present on the Grid side of the STS module, or if no STS module is used, additional CTs or a meter must be installed, as shown in the system diagram in Section 2.5.

There are two selectable installation methods to measure power consumption or ensure zero power export to the grid. The default method is to use optional CTs.
However, if the distribution box where the CTs need to be installed is too far from the PCS module—requiring the CT cable to exceed 10 meters—it is recommended to use a smart meter instead of three CTs.
Please contact the Deye support team to confirm the appropriate CT or smart meter specifications.

3.8.1 Wiring of only CT

It should be noted that the STS has a built-in current sampling circuit. If the load is only connected to the Load Port, there is no need to install extra CTs.
Using CTs alone is only applicable in applications without STS modules!

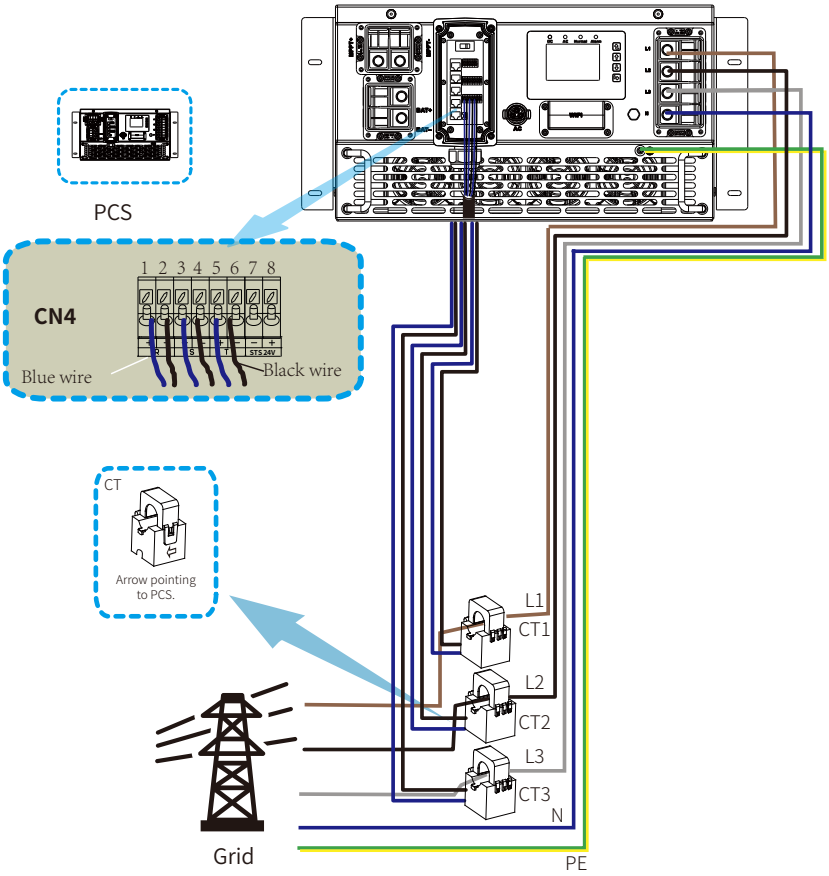

***Note:**
1. When drawing power from the utility grid, if the grid power displayed on the LCD screen appears as a negative value, please adjust the installation direction of the CTs.

2. Wire color examples in this chapter reference European standard:
• L1 = Brown
• L2 = Black
• L3 = Grey
• N (Neutral) = Blue
• PE (Protective Earth) = Green-and-Yellow
Important:Conductor color coding varies significantly by country/region. Always verify and comply with local electrical regulations during installation.

3.8.2 Wiring for Meter with CT

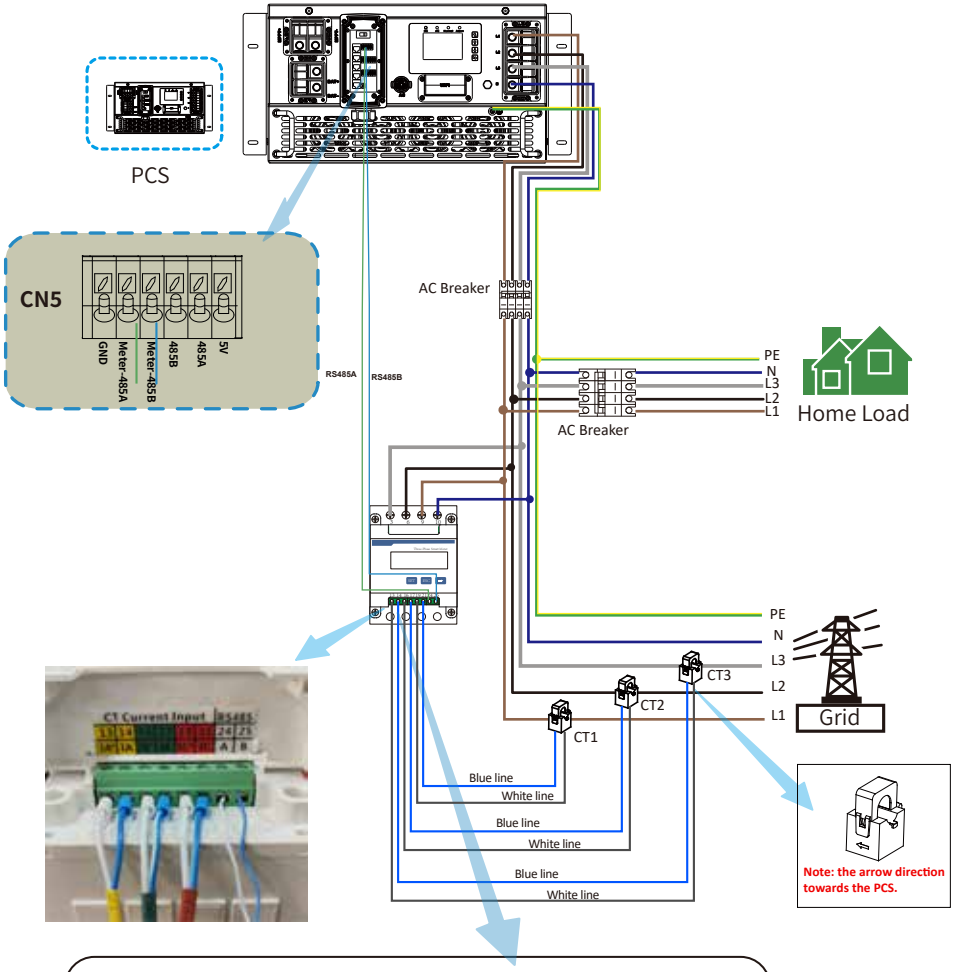

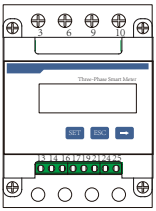

230/400V,3~
250A/50mA
50/60Hz

CHNT DTSU666

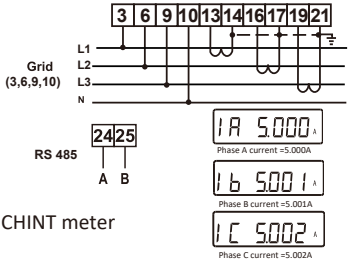

CHINT meter

PIN 13,16,19: White cable of the CT
PIN 14,17,21: Blue cable of the CT

Note: In scenarios where multiple PCS units are connected in parallel, the measured current will exceed 250A, so the meter needs to be reselected. (Alternatively, the recommended meter can be directly replaced with a Chint dual-channel CT meter.)

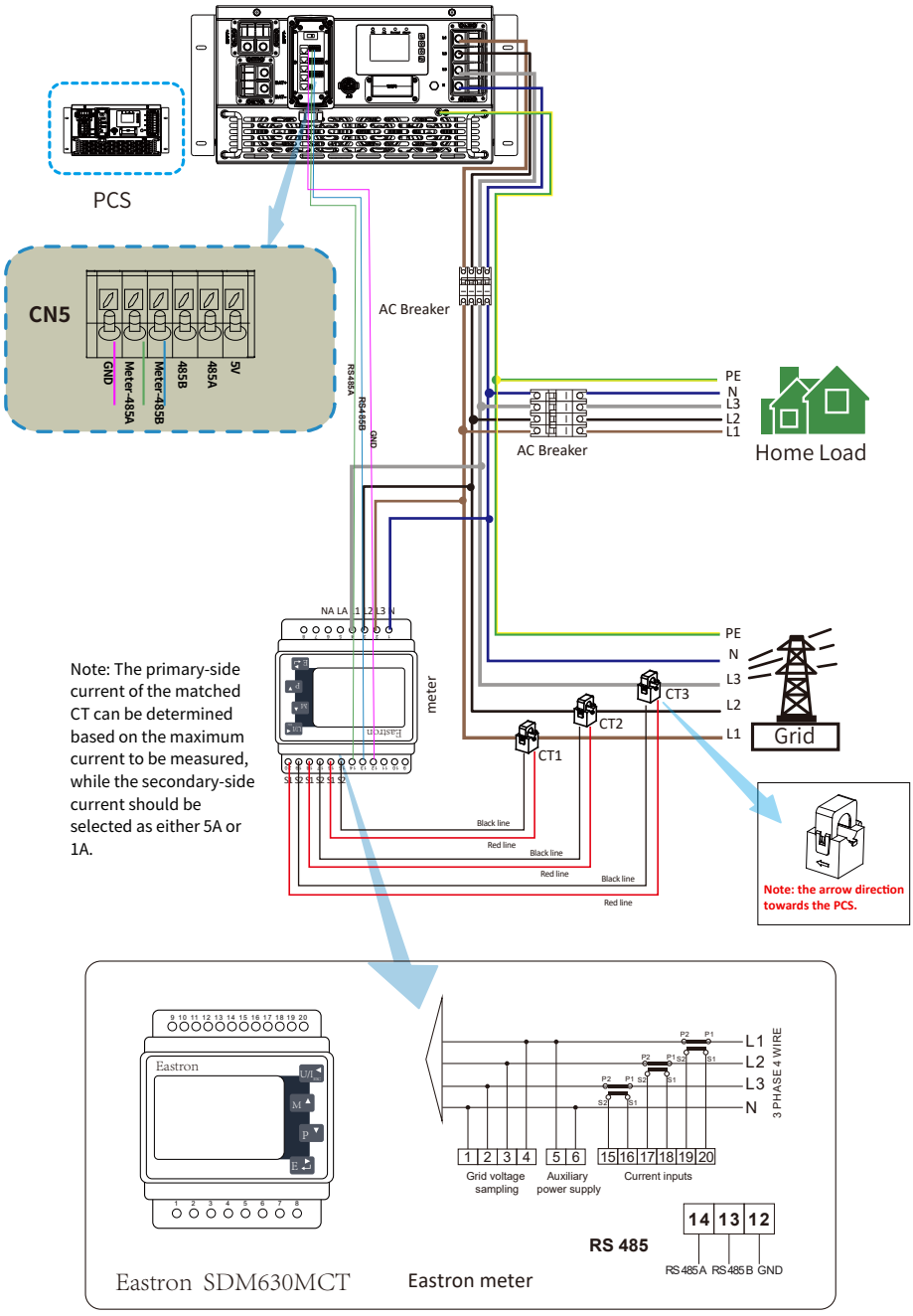
PCS
CN5
GND
Meter-485A
Meter-485B
485B
485A
5V
RS485A
RS485B
GND
AC Breaker
AC Breaker
PE
N
L3
L2
L1
Home Load
NA LA 1 2 L3 N
meter
CT1
CT2
CT3
PE
N
L3
L2
L1
Grid
Black line
Red line
Black line
Red line
Black line
Red line
Note: the arrow direction towards the PCS.
Note: The primary-side current of the matched CT can be determined based on the maximum current to be measured, while the secondary-side current should be selected as either 5A or 1A.
Eastron
Eastron SDM630MCT
L1
L2
L3
N
3 PHASE 4 WIRE
1 2 3 4
Grid voltage sampling
5 6
Auxiliary power supply
15 16 17 18 19 20
Current inputs
RS 485
14 13 12
RS 485 A RS 485 B GND
Eastron meter

3.9 Data Logger Connection

For the configuration of data logger, please refer to the user manual of data logger. Wi-Fi plug is not the only option, If the installation location does not have Wi-Fi signal or the signal is weak, you can also choose a data logger that communicates via other interfaces.

3.10 Parallel Wiring Diagram

Note: In a parallel system, battery-less mode is also supported. All PCSs connected in parallel must be of the same model. Please use a lithium battery from the " Deye Approved Battery List. "

Each PCS should has its own separate battery set.

500kW C&I Storage System Layout(5 sets of SUN-100K-PCS01HP3)

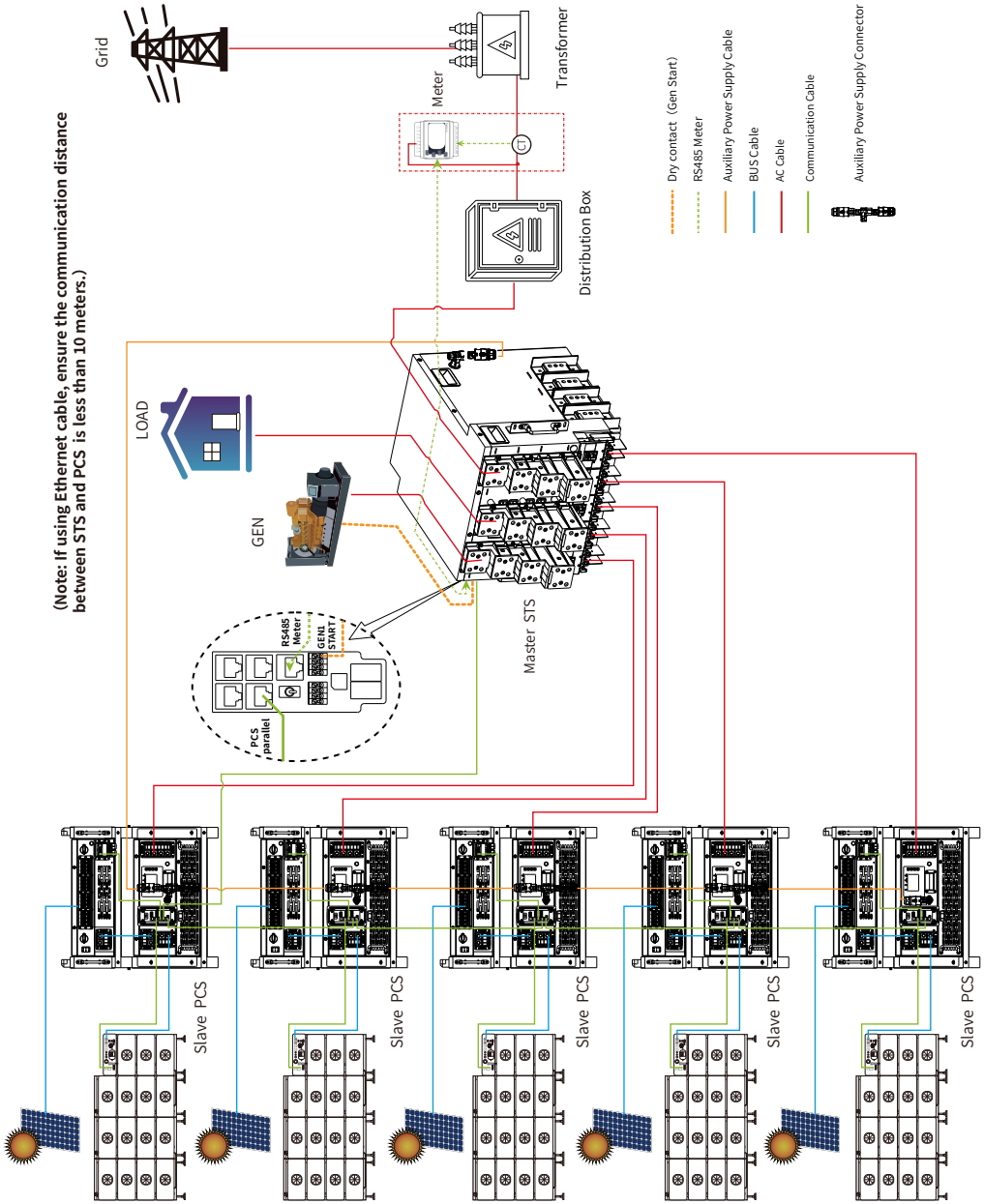

500kW C&I Storage System Layout(4 sets of SUN-125K-PCS01HP3)

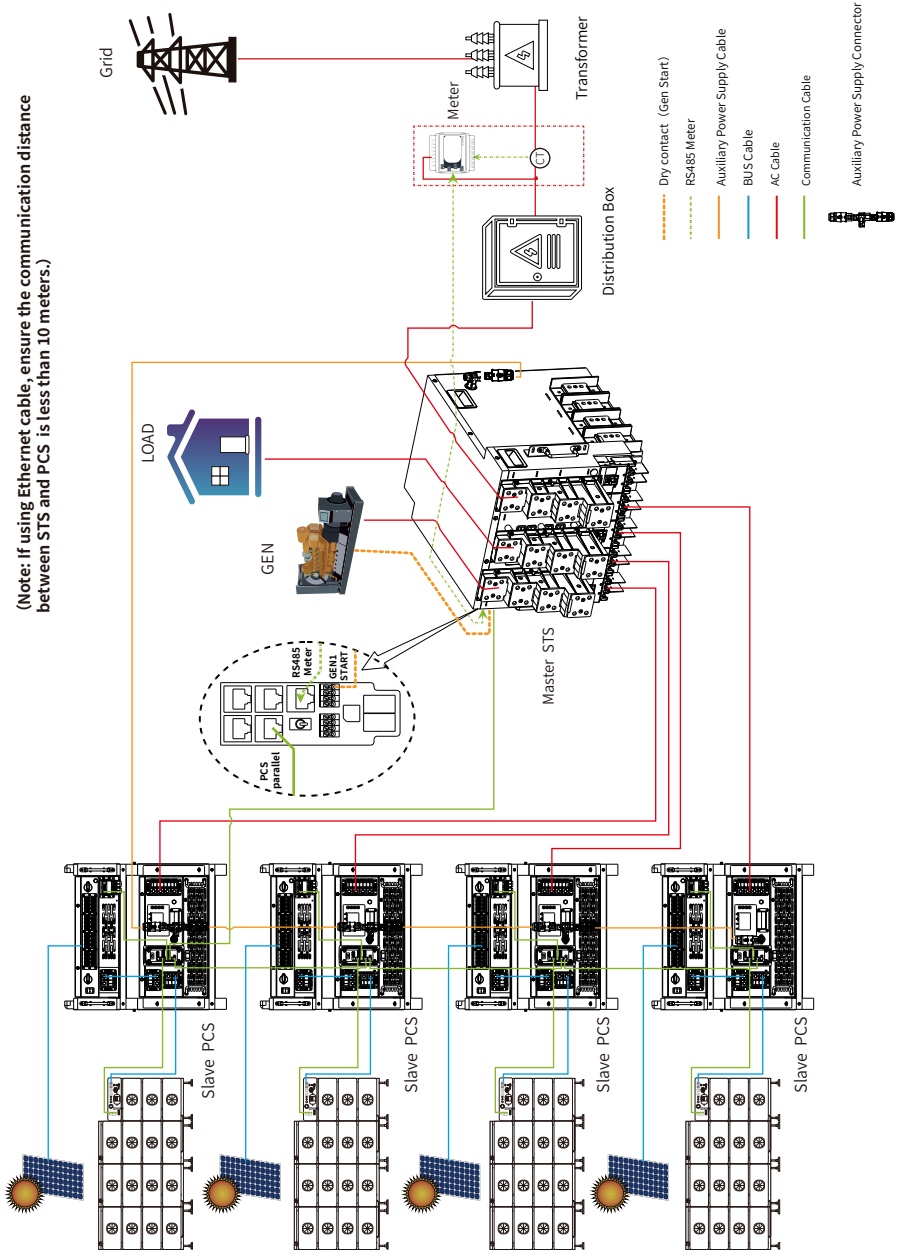

1MW C&I System Layout (Two STS units interconnected via parallel ports)

Note:

1.When multiple STS units are interconnected via load ports (with load terminals tied together), off-grid operation supports a maximum load of 700kW only.

2. If using Ethernet cable, ensure the communication distance between STS and PCS is less than 10 meters.

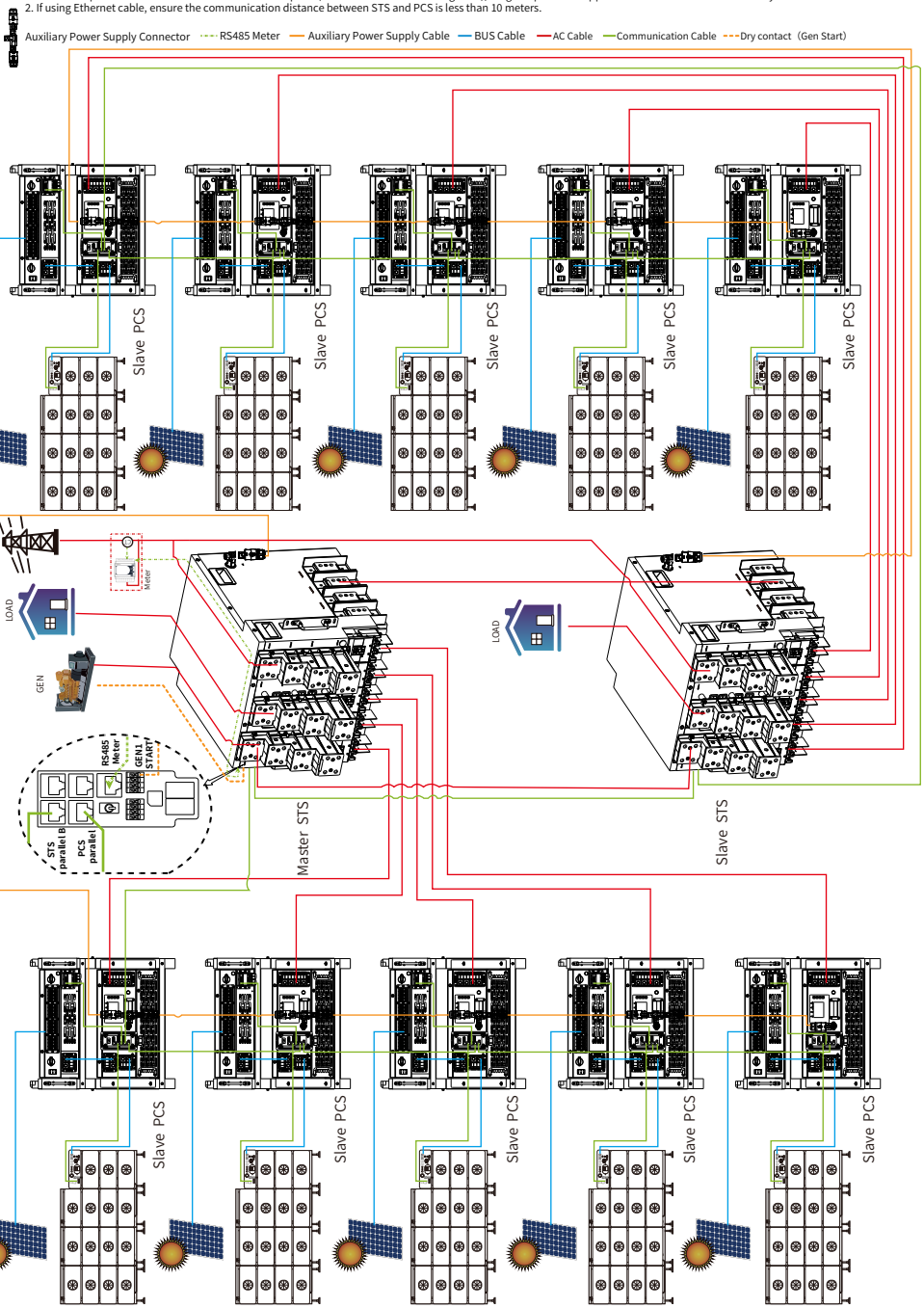

3.11 Wiring diagram with neutral line grounded (A)

This diagram is an example for an application that neutral connects with the PE in a distribution box.
The neutral cable of GRID side and BACK-UP side must be connected together according to the wiring rules AS/NZS_3000. Otherwise the backup function will not work.
For countries such as Australia, New Zealand, etc., please follow local wiring regulations!

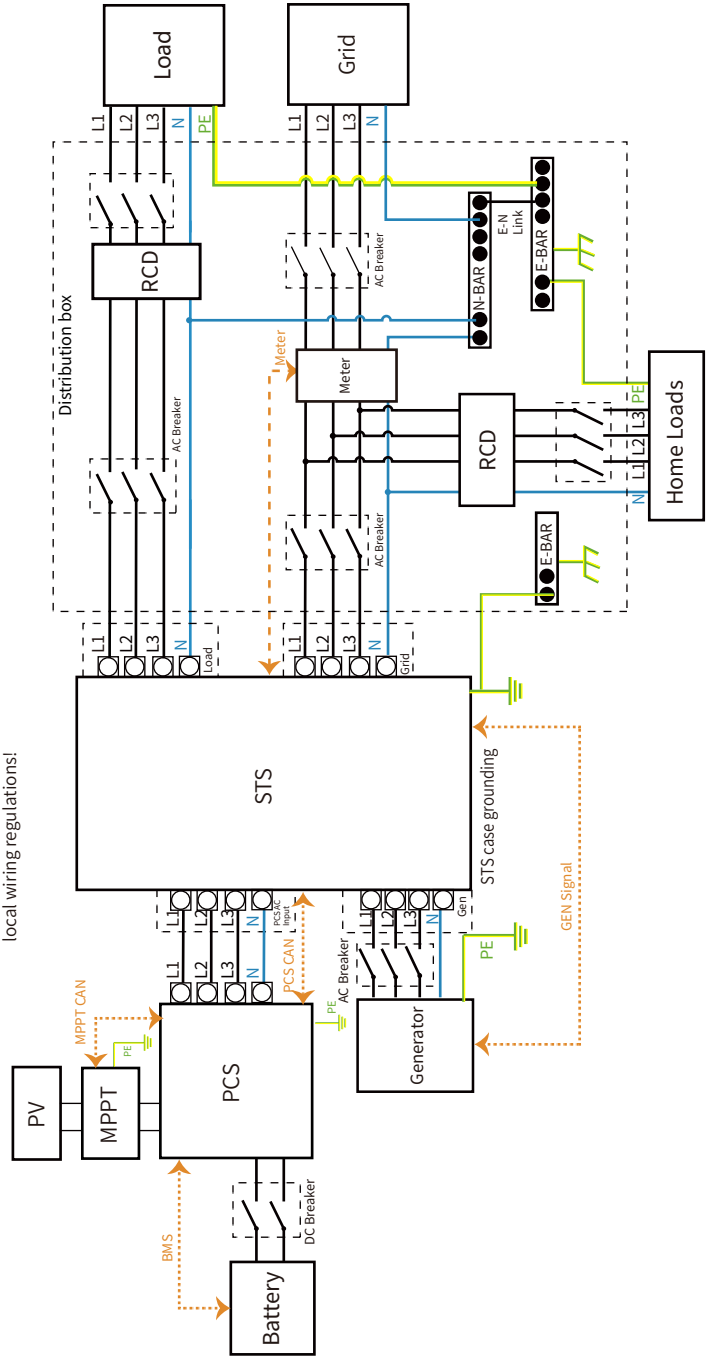

3.11 Wiring diagram with neutral line ungrounded(B)

This diagram is an example for an application in which neutral is separated from the PE in the distribution box.
For countries such as China, Germany,the Czech Republic, Italy, etc., please follow local wiring reguations!

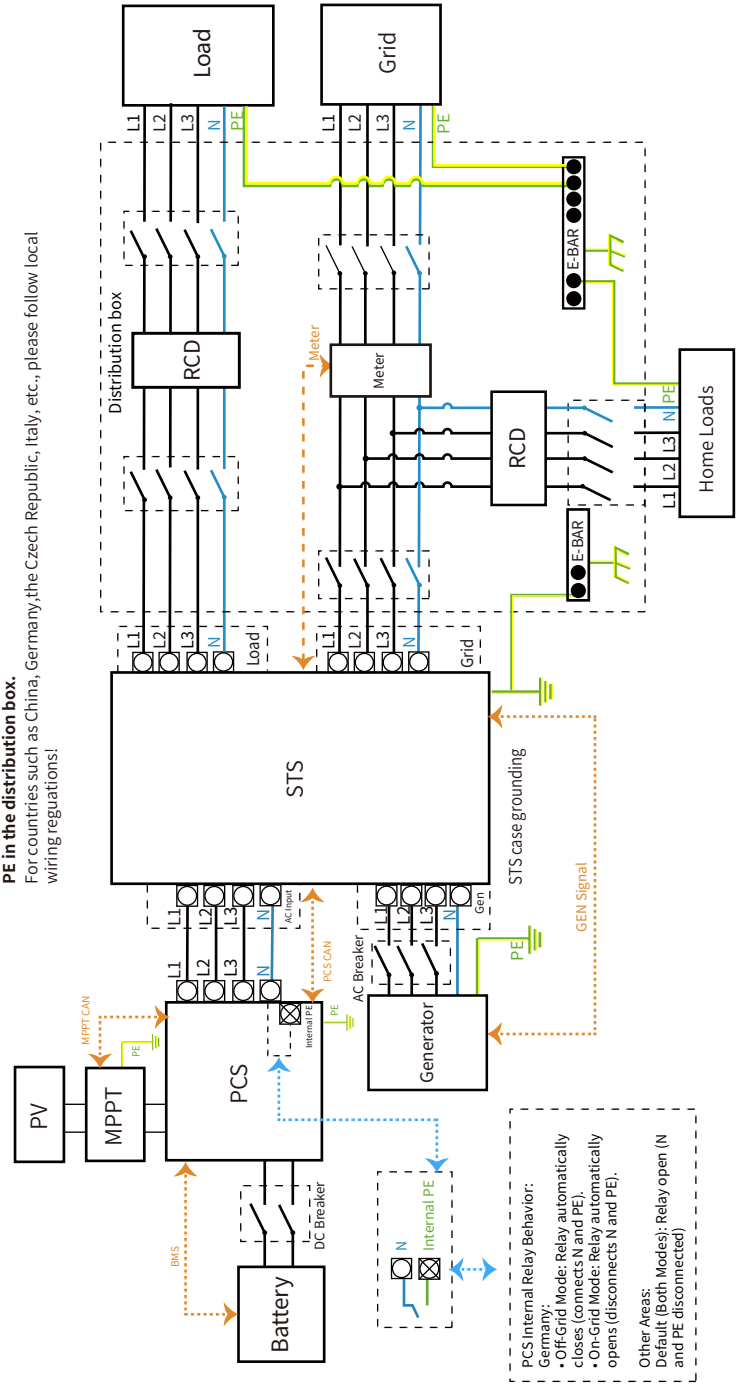

3.12 Mode

Mode I:Only PCS Module Mode

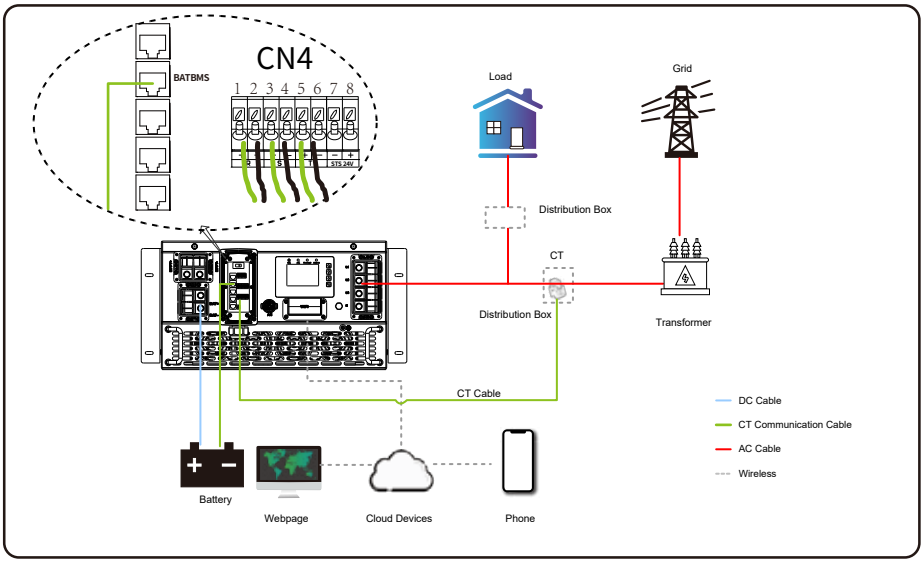

Mode II: PCS+MPPT Mode

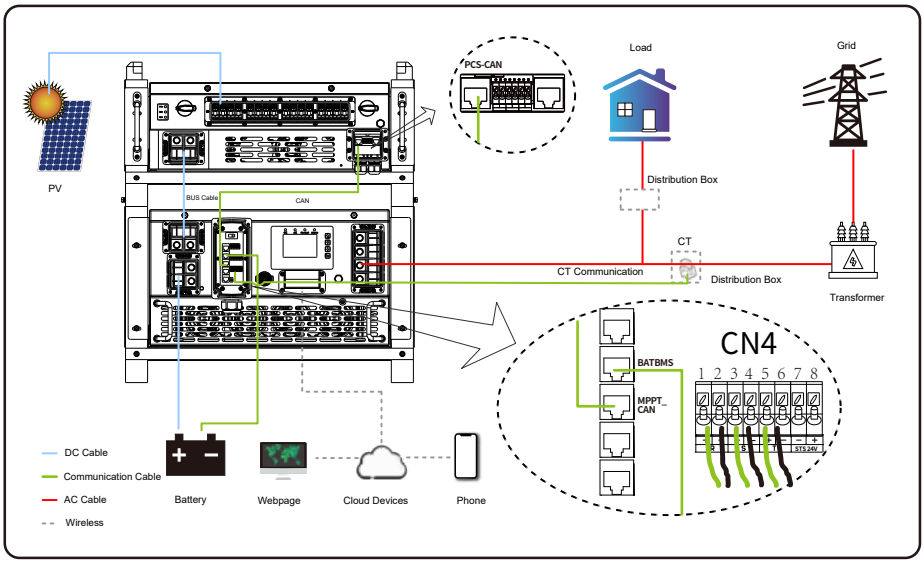

Mode III: PCS+STS Mode

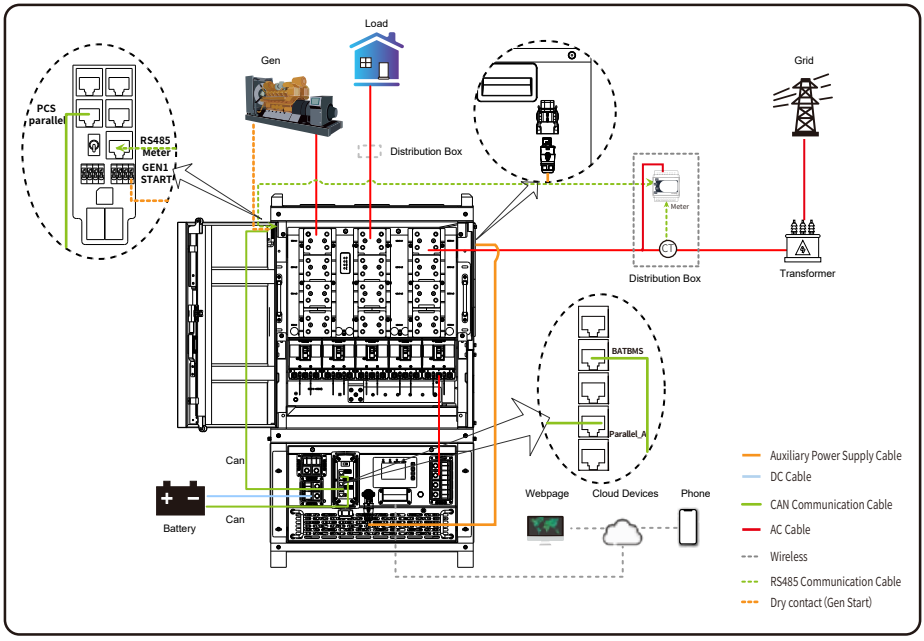

Model IV：PCS+STS+MPPT Mode

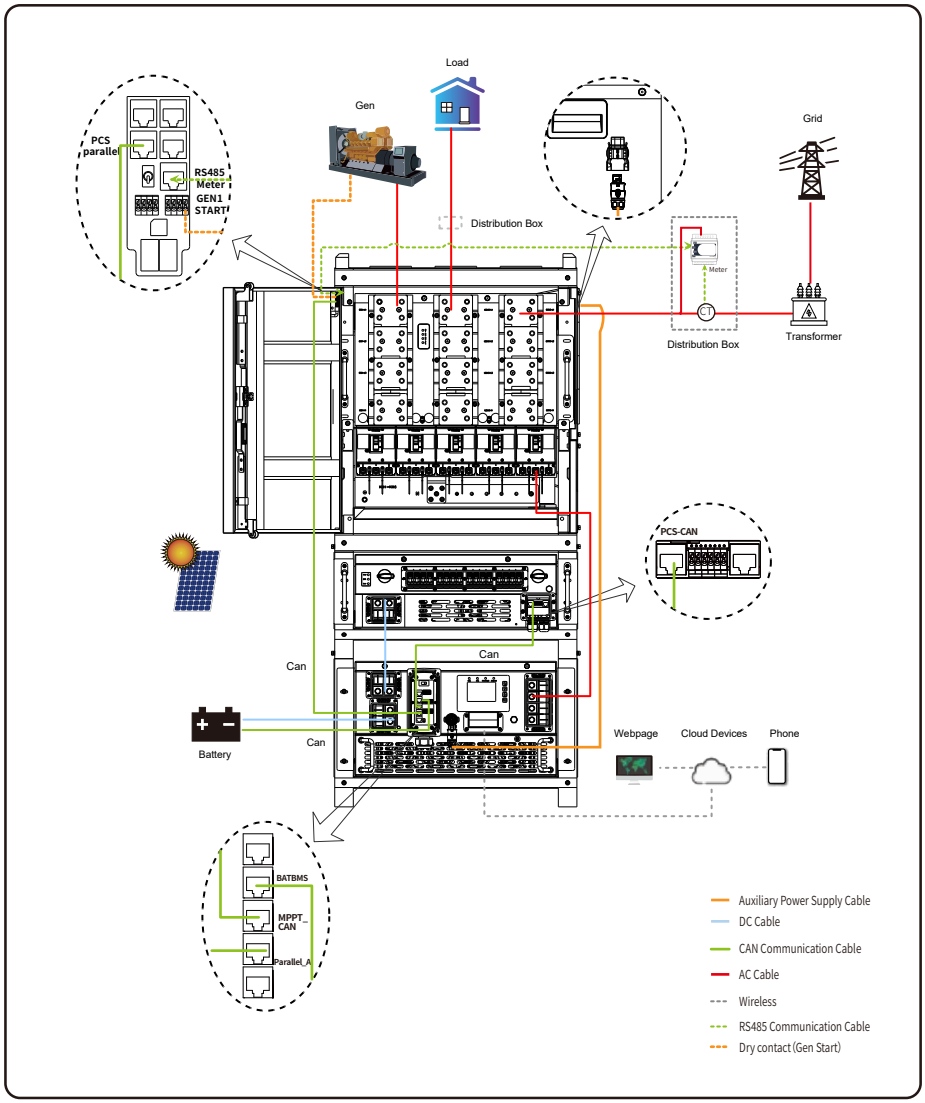

4. Operation

4.1 Power ON/OFF

Once the whole system has been properly installed,please follow the steps below to turn on the PCS:
(1) Turn on all the AC breakers on the AC side of PCS .
(2) Turn on the battery(If any) and DC breaker between battery and PCS.
(3)Turn on the DC breakers between the PV strings and the MPPT module(If have), and switch on the DC switches of MPPT module.

When you want to shut down the PCS module, please follow the following steps:
(1) Turn off all the AC breakers on the AC side of PCS .
(2)Turn off the DC breakers between the PV strings and the MPPT module(If have), and switch off the DC switches of MPPT module.
(3) Turn off the battery(If any) and DC breaker between battery and PCS.

4.2 Operation And Display Panel

The HMI interactive interface on the front of the PCS module is shown in the following figure. It includes four LED indicator lamps to display the operating status of the PCS module, four function keys, and a touch-sensitive LCD display for viewing operational data and adjusting parameter settings.

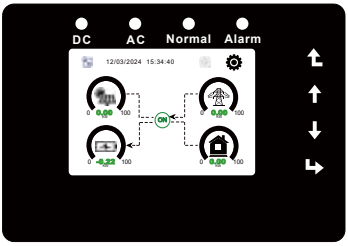

PCS

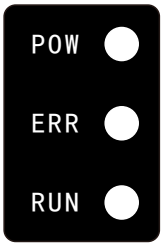

MPPT

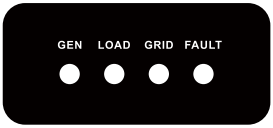

STS

LED Indicator		Messages
DC	Green led solid light	PV Connection normal
AC	Green led solid light	Grid Connection normal
Normal	Green led solid light	PCS operating normal
Alarm	Red led solid light	Malfunction or warning

Chart 4-1 LED indicators(PCS)

Function Key	Description
Esc	To exit setting mode
Up	To go to previous selection
Down	To go to next selection
Enter	To confirm the selection

Chart 4-2 Function Buttons(PCS)

LED Indicator		Messages
POW	Solid green light	MPPT module is powered on
ERR	OFF	Normal
	Solid red light	MPPT module is malfunctioning
RUN	Solid green light	Normal

Chart 4-3 LED indicators(MPPT)

LED indicator status		Messages
GEN	Blink green light	GEN terminal has voltgae, but the relays are not engaged
	Solid green light	GEN terminal has voltgae and the relays are normally engaged
	OFF	GEN terminal without voltgae
GRID	Blink green light	GRID terminal has voltgae,but the relays are not engaged
	Solid green light	GRID terminal has voltgae and the relays are normally engaged
	OFF	GRID terminal without voltgae
LOAD	Solid green light	Normal
FAULT	Solid red light	STS module is malfunctioning
	Blink red light	STS module is standby
	OFF	Normal

Chart 4-4 LED indicators(STS)

5. Commissioning Through LCD

5.1 Main Screen

LCD is touchable, and its main screen displays the overall information of the ESS system constructed by the PCS module as follows.

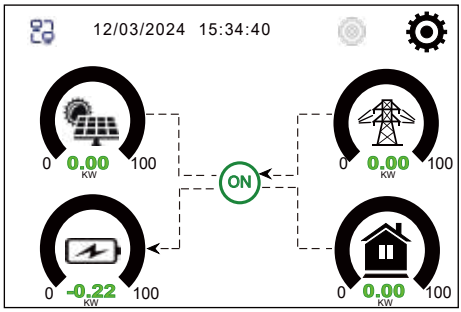

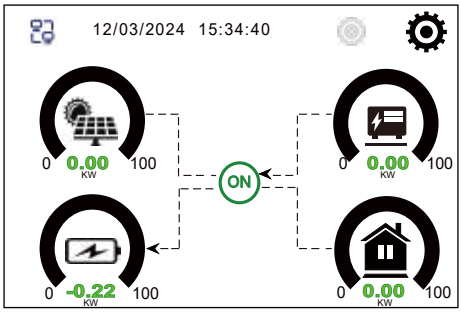

1. The icon at the center of the screen indicates whether the system is operating normally. It displays " ON " for normal operation or an error code such as " Comm./F01-F64 " for communication errors or other faults. Please refer to the Error Code List in Chapter 8 for troubleshooting solutions.
2. The date and time are displayed at the top center of the screen. These must be set correctly during commissioning to match the local time.
3. The gear icon in the upper-right corner of the screen provides access to the system setup menu, which includes Basic Setup, System Mode, Grid Setup, STS, Fault Code, Battery Setup, and Advanced Settings.
4. The main screen displays icons for PV (top left), grid (top right),Grid or Diesel generator, load (bottom right), and Battery (bottom left). It also shows the direction of energy flow using moving points.

Clarifications about system status:
• PV power will always be positive.
• In a system with only one PCS module, load power will always be positive. (In a parallel system, load power may be negative if energy from another PCS module flows into the current one.)
• A negative grid power value indicates energy being exported to the grid (sold), while a positive value indicates energy being imported from the grid (purchased).
• A negative battery power value indicates charging, whereas a positive value indicates discharging.

5.1.1 LCD Operation Flow Chart

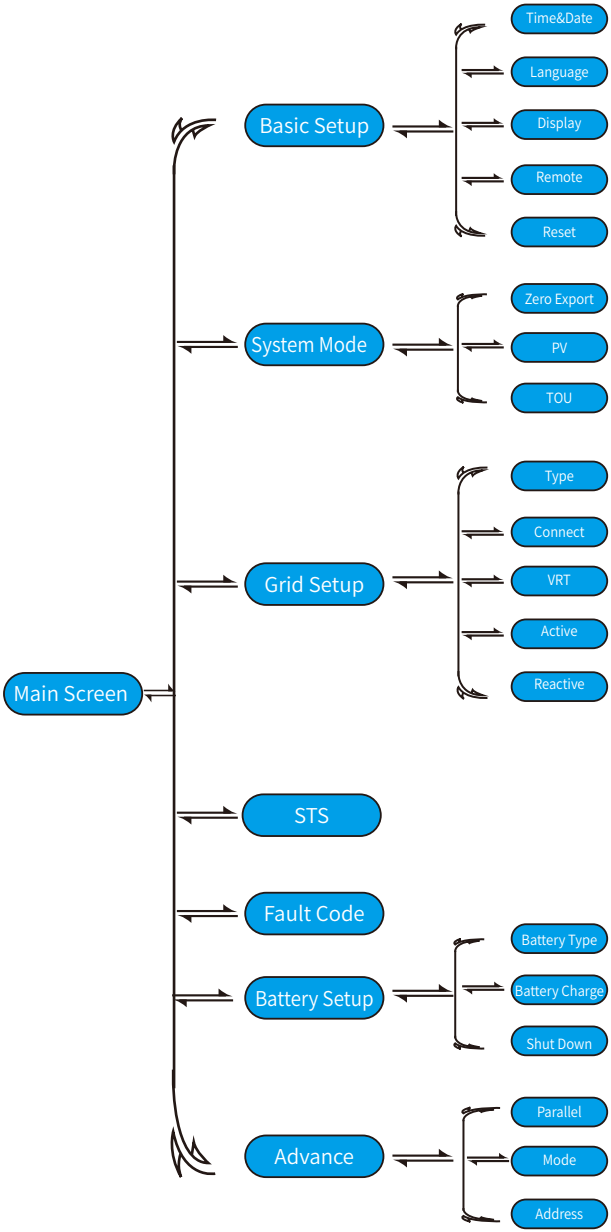

LCD Home Screen

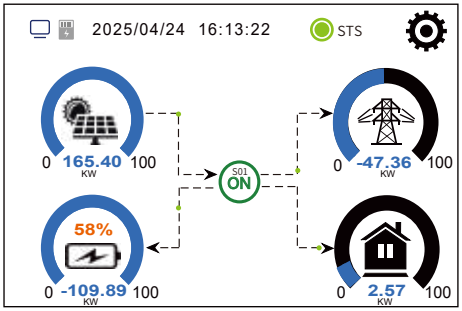

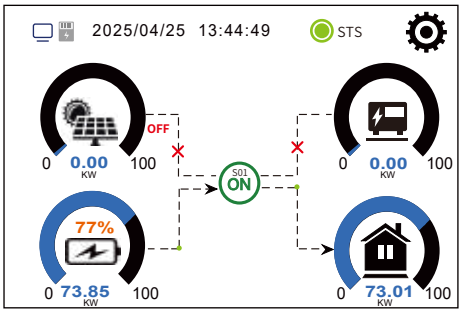

LCD Home Screen: This interface is designed to monitor the system's operational status, including real-time power flow direction of photovoltaic (PV), battery, grid, and load.

STS :It indicates the online status of the connected STS devices:
Green: STS is online and communication with the PCS is successfully established.
Gray: STS is offline. (communication with the PCS is disconnected).

:Click this icon to configure system parameters.

:It displays real-time PV output power. Click this icon to view detailed photovoltaic information.

:It displays real-time grid input/output power. Positive values indicate power exported to the grid, while negative values indicate power imported from the grid. Click this icon to view detailed grid information.

:It displays the output power of the diesel generator. When the generator is connected, its icon will appear at the grid icon position on the interface.

:It displays the battery's real-time charge/discharge power and State of Charge (SOC). Positive values indicate discharging power , while negative values indicate charging power. Click the icon to view detailed battery information.

:It displays real-time load power consumption. Click this icon to view detailed load information.

ON :It displays operational status and fault codes; clicking this icon reveals comprehensive system operational data, including this unit's PCS operation data, connected photovoltaic (PV) system data, operational data from all parallel-connected PCS units within the system, as well as grid, load, and diesel generator operation data.

✕ :If a red cross (X) appears on the energy flow path, it indicates that communication or power line connectivity between the device at one end of the path and the PCS is disconnected. (For example： In off-grid mode, a red X will appear on the energy path between the grid and the PCS)

OFF: If the word "OFF" appears next to the PV icon, it indicates that the MPPT is communicating normally with the PCS but is in a shutdown state. To resolve this, click "⚙", then navigate to System Mode, enter the PV Settings, select PV Switch On, and press "↵" to confirm. This will enable software command control to power on the MPPT.

:The electricity meter's online status is indicated by its icon: blue signifies normal communication with PCS/STS; gray indicates a communication fault. (Note:When CT is selected instead of an electricity meter, the meter icon is hidden.)

Solar Data Display

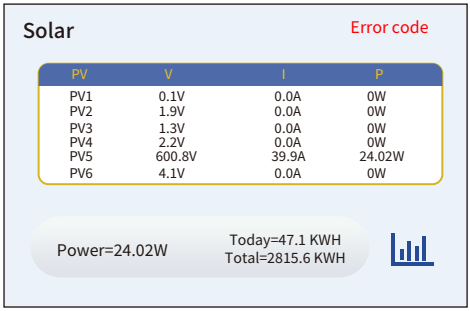

Solar Data: This interface displays the power generation data of the MPPT modules connected to the PCS.
PV1-PV8: Indicates 8 independent MPPT channels. Each channel shows real-time parameters, including voltage (V), current (A), and power (kW).

Error code: It displays the MPPT module fault code.

: Click the chart icon to view a bar chart of historical PV energy generation statistics (daily, monthly, or annual).

System Solar Power

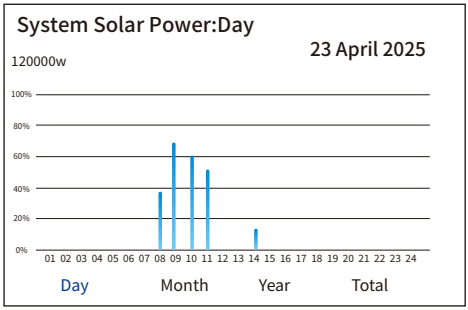

System Solar Power Data Bar Chart: This interface displays historical statistics of photovoltaic (PV) power generation, including daily, monthly, annual, and cumulative totals.

Battery Data Display

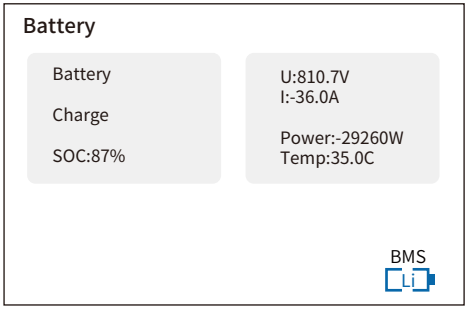

Battery Data: This interface displays the operational data of the battery system connected to the PCS , including charge/discharge status, State of Charge (SOC), voltage, current, power, and temperature information.

BMS **:** Click the icon to access detailed BMS data.

Li BMS

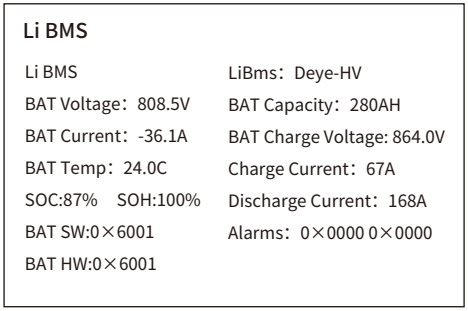

BMS Data: This interface presents data uploaded by the Battery Management System (BMS), including battery system voltage, current, temperature, State of Charge (SOC), State of Health (SOH), and other critical parameters.
BAT Voltage: Average voltage of the battery system (V).
BAT Current: Total output current of the battery system (A).
Positive value: Discharging current.
Negative value: Charging current.
BAT Temp: Maximum temperature of individual battery cells (°C).
SOC: Average remaining capacity of the battery system (%).
SOH: Average health status of the battery system (%), reflecting capacity retention and aging.
BAT SW: Software version of the BMS.
BAT HW: Hardware version of the BMS.
BAT Capacity: Rated capacity of individual battery cells (Ah).
BAT Charge Voltage: Charge cut-off voltage of the battery system (V).
Charge Current: Maximum allowable charging current (A).
Discharge Current: Maximum allowable discharging current (A).
Alarms: Active fault codes indicating system anomalies.

Grid Data Display

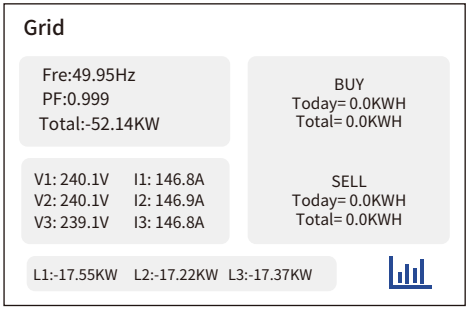

Grid Data: This interface displays Grid voltage, frequency, current, Power, Power Factor, along with energy import from grid , export to grid**.**

: Click the icon to access detailed Grid data.

System Grid Power

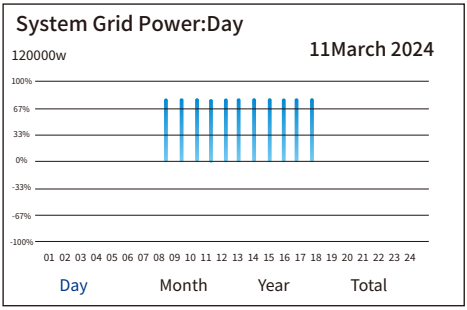

System Grid Power Data Bar Chart: This interface displays historical statistics of grid power import/export, including daily, monthly, annual, and cumulative totals.

Load Data Display

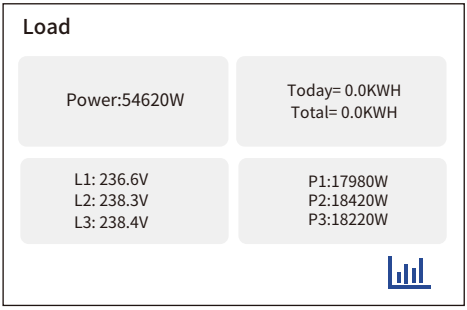

Load Data: This interface displays the load power, phase voltages, as well as today's and cumulative load energy consumption statistics.

: Click the icon to access detailed Load data.

System Load Power

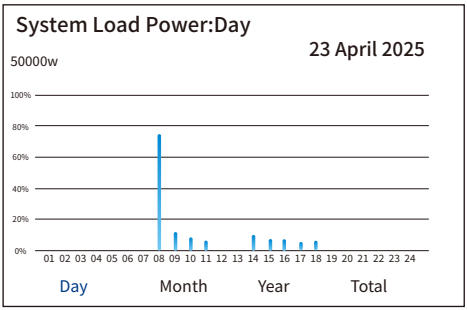

System Load Power Data Bar Chart: This interface displays historical statistics of load power consumption, including daily, monthly, annual, and cumulative totals.

PCS Data Display

PCS

	INV	Total:106.0KW	PV
L1:240.8V L2:240.7V L3:240.5V	146.9A 147.0A 146.9A	35.48KW 35.36KW 35.22KW	MPPT:0 0W

BAT		Grid	
800.0V 133.3A	106.7KW -100.0°C	L1:240.7V L2:240.9V L3:239.9V	50.02Hz 0.999

PCS Online	PCS Total	Grid	Load
10	Total:536.8KW P1:179.0KW P2:179.0KW P3:178.9KW	Total:528.8KW P1:178.2KW P2:174.4KW P3:176.2KW	Total:7970W P1:750W P2:4570W P3:2650W

PCS Data : This interface displays real-time data for the PCS, its connected battery packs, MPPT module, grid port parameters, as well as total power/phased power summation and total load/phased load summation under parallel operation.
PCS INV: It displays the INV output voltage, current, and power of this PCS.
PV : It displays the data of the MPPT module connected to this PCS, including the number of MPPT channels and MPPT output power.
BAT: It displays the data of the Battery system connected to this PCS , including current, power and temperature.
Grid: It displays the grid-side voltage, frequency, and power factor of the single PCS unit.
PCS Online: The number of PCS units in parallel operation.
PCS Total: It displays the total INV power output and individual phase power output of all parallel-connected PCS units in the system.
Grid: It displays the total grid import/export power of all parallel-connected PCS units.
Load: Total output power delivered to loads by all parallel-connected PCS units.

Note: Press " ↓ " to page down and view more information.

STS Data Display

STS	Offline	Total:-149W	
Status		P	I
Off-Grid		-180W 16W 15W	L1:0.0A L2:0.0A L3:0.0A
Grid		Gen	
L1:238.1V L2:240.2V L3:238.0V	50.00Hz 0/240/120	L1:19.0V L2:8.3V L3:26.8V	0.00Hz Fault
Para		Load	
L1:1.7V L2:1.3V L3:1.6V	0.00Hz Fault	L1:0.0V L2:0.0V L3:0.0V	0.00Hz 0/240/120

Status: STS Status，Off-Grid / Grid On / Gen On / Off-Grid(Para)
- **Off-Grid:** It indicates the STS is operating off-grid.
- **Grid On:** It indicates the STS is connected to the grid.
- **Gen On:** It indicates the STS is connected to the generator.
- **Off-Grid (Para):** It indicates multiple STSs are operating off-grid in parallel.

Total Power Display (Total): If the status is Grid On, it shows total power at the Grid Port; if the status is Gen On, it shows total power at the Gen Port; and if multiple STSs are in Off-Grid(Para) status, it shows total power at the Parallel Port for the STS.

Power Display (P): If the status is Grid On, it shows per-phase power at the Grid Port; if the status is Gen On, it shows per-phase power at the Gen Port; and if multiple STSs are in Off-Grid (Para) status, it shows per-phase power at the Parallel Port for the STS.

Current Display (I): If the status is Grid On, it shows per-phase current at the Grid Port; if the status is Gen On, it shows per-phase current at the Gen Port; and if multiple STSs are in Off-Grid(Para) status, it shows per-phase current at the Parallel Port for the STS.

Grid: STS Grid Port Voltage, Frequency, and Power Factor.
Gen:STS Gen Port Voltage, Frequency, and Power Factor.
Para:STS Parallel Port Voltage, Frequency, and Power Factor.
Load:STS Load Port Voltage, Frequency, and Power Factor.
0/240/120 OR 0/120/240: It displays the voltage phase sequence of this port.
Fault: No voltage phase sequence detected.

PCS1-5 Data Display

PCS1-5

	A	B	C	Total	Bat Soc	Bat P
Total	178.9KW	179.0KW	178.9KW	536.8KW	0.0%	60.49KW
PCS1	36.26KW	36.36KW	36.26KW	108.9KW	0.0%	-51.03KW
PCS2	36.33KW	36.33KW	36.24KW	108.9KW	0.0%	-50.93KW
PCS3	35.34KW	35.39KW	35.24KW	106.0KW	0.0%	106.7KW
PCS4	34.83KW	34.55KW	34.79KW	104.2KW	0.0%	106.7KW
PCS5	36.17KW	36.32KW	36.40KW	108.9KW	0.0%	-50.99KW

Parallel PCS1-5 Data: This interface displays the per-phase power output of each PCS in parallel operation mode, along with the State of Charge (SOC) and charge/discharge power of the battery system connected to each PCS unit.

Note: Press " ↓ " to page down and view more information.

PCS6-10 Data Display

PCS6-10

	A	B	C	Total	Bat Soc	Bat P
Total	178.9KW	179.0KW	178.8KW	536.7KW	0.0%	60.38KW
PCS6	0W	0W	0W	0W	0.0%	0W
PCS7	0W	0W	0W	0W	0.0%	0W
PCS8	0W	0W	0W	0W	0.0%	0W
PCS9	0W	0W	0W	0W	0.0%	0W
PCS10	0W	0W	0W	0W	0.0%	0W

Parallel PCS6-10 Data: This interface displays the per-phase power output of each PCS in parallel operation mode, along with the State of Charge (SOC) and charge/discharge power of the battery system connected to each PCS unit.

Note: Press "↓" to page down and view more information.

Settings Display

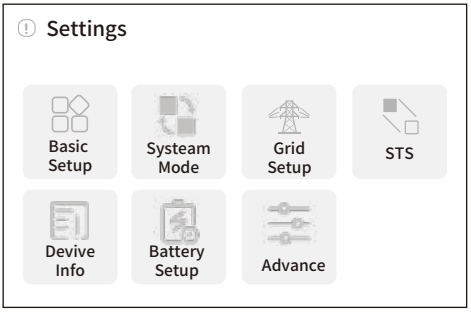

Settings: This interface is used to configure system parameters including Basic Setup, System Mode, Grid Setup, STS, Battery Setup, and Advanced functions, as well as to view fault codes and Device information.

Note: All settings require confirmation by pressing the "↵" to take effect.

5.2 Basic setup

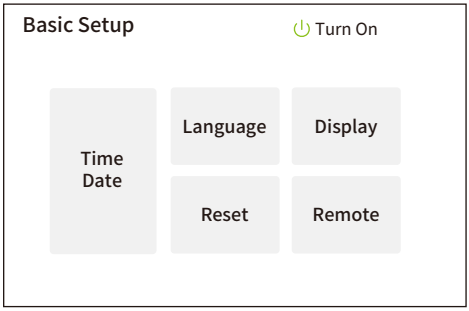

Basic Setup: This interface is used for setting the time and date, language, display effects, parameter reset, and remote control methods.

Turn On: Click this button to turn the PCS on/off. A green "Turn on" indicates that it is already powered on and can be clicked again to shut down the PCS. A gray "Turn off" indicates that it is powered down.

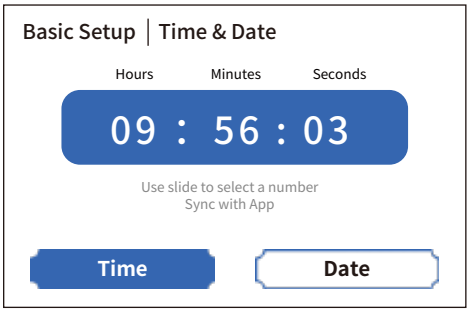

Time&Date: Slide up and down the corresponding screen area to adjust the time to match the local time,and then go to the date page and adjust the date using the same method.



Language: Choose your preferred display language for the LCD. The current options are English, French, Spanish, and Portuguese. Additional languages may be supported in the future.

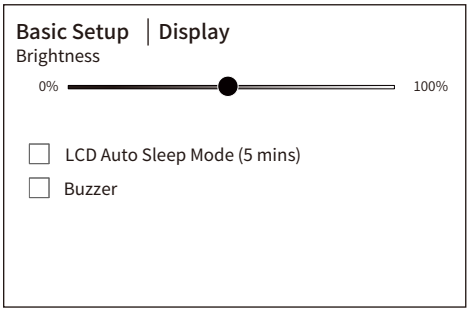

Brightness: Adjust the LCD screen brightness by dragging the progress bar left or right.
LCD Auto Sleep Mode (5 mins): When enabled, the LCD will automatically enter sleep mode after 5 minutes of inactivity.
Buzzer: When enabled, the buzzer will sound during fault alarm periods.

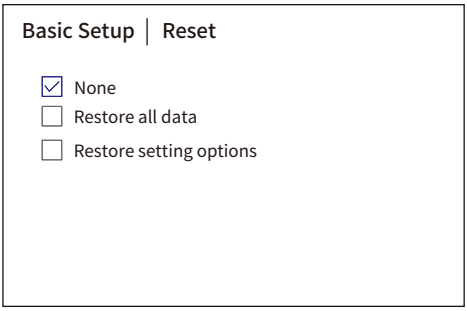

None: Keep original value, no change.
Restore all data: Recover all data in the PCS.
Restore settings options: Only Recover factory settings, it does not clear power generation/consumption data.

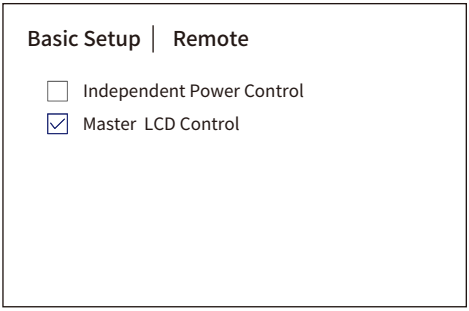

Independent Power Control: Remote control mode, independent power control via external devices.
Master LCD Control: Local control mode, TOU(Time of Use) Function is required to control charging and discharging.

5.3 System Work Mode

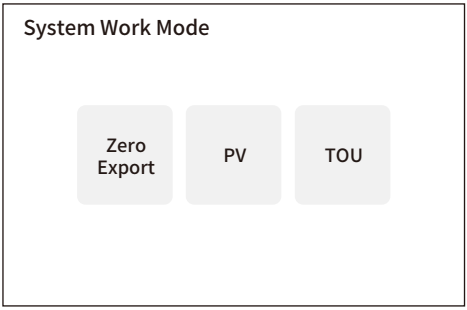

System Work Mode: This interface is used to configure the system operating modes, including Zero Export to Grid, PV system parameter settings, and PCS scheduled charging/discharging control (TOU).

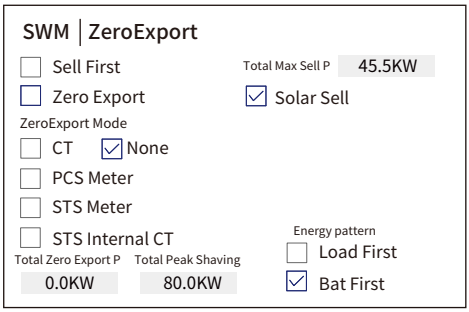

Sell First: This mode allows the PCS to feed excess power from PV/battery into the grid. (If TOU permits battery discharge, the battery can sell electricity to the grid.) In Sell First mode, PV power prioritizes supplying the load. Any surplus PV energy will charge the battery or feed into the grid. In this mode, you need select either CT, PCS Meter, STS Meter, or STS Internal CT to implement the functionality.
Total Max Sell P: This setting is enabled in Sell First mode, configuring the maximum allowed PCS feed-in power to the grid.
Zero Export: When enabled, the PCS will not feed power into the power grid. In this mode, you also need select either CT, PCS Meter, STS Meter, or STS Internal CT to implement the functionality.
Solar Sell: This setting is enabled in Zero Export mode, allowing the PCS to feed surplus DC power from the MPPT module into the grid.
Zero export mode: It includes four implementation methods, when the system does not have an STS, a CT/PCS meter must be used. When the system includes an STS, an STS meter/STS internal CT can be selected.

None: Default status,it indicates that the Zero Export mode is disabled.
CT: To enable the Zero Export function, an external Current Transformer (CT) must be installed on the AC output side of the PCS. The CT connects to the PCS via the CN1 (R, S, T) ports on the PCS communication board.
PCS Meter: To implement the Zero Export function, an external energy meter must be connected to the AC output side of the PCS. The meter interfaces with the PCS through the Meter-RS485 port on the PCS communication board.
STS Meter: If loads are connected to the grid-side port of the STS, an external energy meter must be installed to prevent power backfeed to the grid. The STS communicates with the meter via the RS485 port on the STS communication board.
STS Internal CT: The built-in CT of the STS grid port is used to implement the Zero Export function.

Total Zero Export P: In Zero Export mode, if excess power from PV or battery attempts to feed to the grid, this setting enables the grid to output a specified power level to the PCS, thereby offsetting the reverse power flow.
Total Peak Shaving: When activated, grid power will be limited to the set value. However, if the grid peak-shaving power, PV power, and battery power combined are insufficient to meet the load demand after peak-shaving, the grid peak-shaving function will become ineffective, and power drawn from the grid may exceed the set limit.
Load First: This setting takes effect in Zero Export mode. PV power is primarily used to supply the load. Any excess power will be used to charge the battery. If PV power is insufficient, the grid will supplement power for the load.
Bat First: This setting takes effect in Zero Export mode. PV power is primarily used to charge the battery. Any excess power will be used to supply the load. If PV power is insufficient, the grid will simultaneously supplement power for both the battery and the load.
Note: To activate either 'Sell First' or 'Zero Export' functionality, one of the following configurations must be selected:
1.Current Transformer (CT)
2.PCS Meter
3.STS Meter
4.STS Internal CT

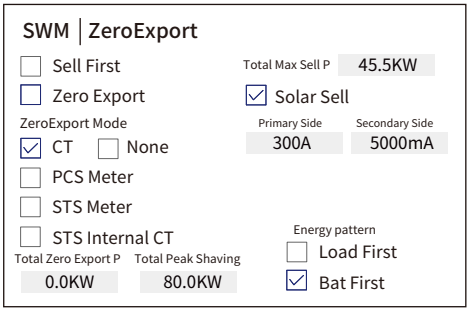

If CT is selected, the CT ratio must be configured:

Primary side: CT primary current rating
Secondary side: CT secondary current rating

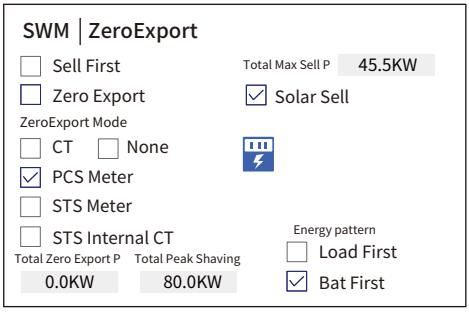

If PCS Meter/STS Meter is selected, click the " " icon to access detailed meter parameter configuration.

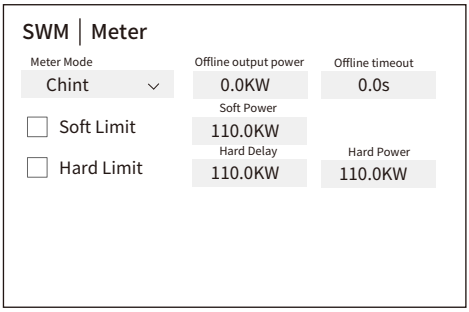

When entering the PCS Meter/STS Meter configuration interface, the following meter parameters can be configured:

Meter Mode: Select meter model (e.g., Chint/Eastron).
Offline output power: The output power value the PCS will use if the meter goes offline
Offline timeout: The duration for determining meter offline status
Soft Limit: Enable or disable the limitation of PCS output power via software. Australian Safety type.
Soft Power: The maximum PCS output power allowed by the software. If this limit is reached, the PCS output power will reach set value. Australian safety type
Hard Limit: Enable or disable the limitation of PCS output power via hardware. Australian Safety type
Hard Delay: When the hard limit is enabled, this setting determines the delay time before it takes effect.
Hard Power: The maximum PCS output power allowed by the hardware. If this limit is reached, the PCS module will shut down.

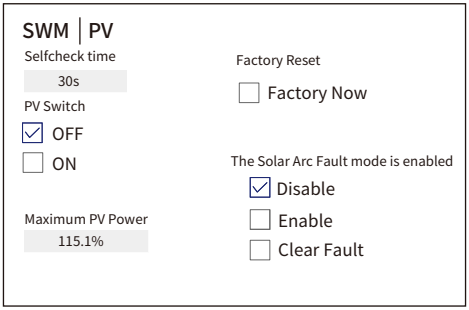

Selfcheck time: The interval at which the MPPT module automatically performs a self-check procedure including ISO, Chip self-check, Voltage, Current etc
Factory Now: Restore the MPPT module to its factory settings.
PV switch On/Off: Use a software command to turn the MPPT module on or off or restart it.
Maximum PV Power: Set the maximum PV generation power.
Arc Fault Mode: Enable or Disable AFCI (Arc Fault Circuit Interrupter) Function. AFCI is primarily used to detect and prevent fire hazards caused by arc faults. In MPPT module, it can detect abnormal DC arcs and disconnect the circuit when necessary to enhance system safety.
Zero Clearning: Eliminate Arc Fault alarm that have already occurred and been resolved.

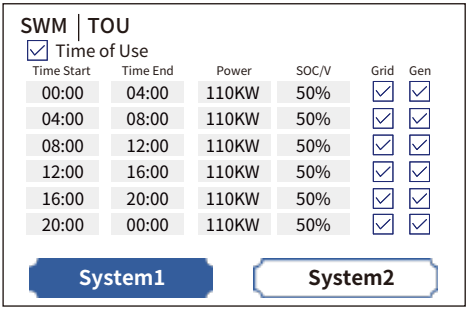

Time of Use: This function allows users to schedule when to use the grid or a generator to charge the battery and when to discharge the battery to power the load. The " Time of Use " setting must be enabled for the following parameters (Grid Charge, Time, Power, etc.) to take effect.

Time Start: The beginning of the scheduled time period.
Time End: The end of the scheduled time period.
Power: The maximum discharge power of the battery allowed by the PCS during each time period.
SOC/V: The target battery voltage or SOC for the current time period. If the actual battery SOC or voltage is lower than the target value, the battery needs to be charged. If an energy source such as solar power or the grid is available, the battery will be charged. If the actual SOC or voltage is higher than the target value, the battery can discharge. When solar power is insufficient to power the load or when " Selling First " mode is enabled, the battery will discharge.
Grid: Determine whether the grid is used for charging during the current time period.
Charge Gen: Allow the use of a generator for charging during the current time period.
Example of Time of Use Settings:
• **00:00 - 04:00:** If the battery SOC is below 50%, the system will use the grid to charge the battery until SOC reaches 50%.
• **04:00 - 08:00:** If the battery SOC is above 50%, the PCS will discharge the battery until SOC reaches 50%. If SOC drops below 50%, the grid will charge the battery up to 50%.
• **08:00 - 12:00:** If the battery SOC is above 50%, the PCS will discharge the battery until SOC reaches 50%.
• **12:00 - 16:00:** If the battery SOC is below 50%, the PCS will charge the battery until SOC reaches 50%. If PV power is sufficient, the battery can be charged up to 50%.
• **16:00 - 20:00:** If the battery SOC is above 50%, the PCS will discharge the battery until SOC reaches 50%.
• **20:00 - 00:00:** If the battery SOC is above 50%, the PCS will discharge the battery until SOC reaches 50%.

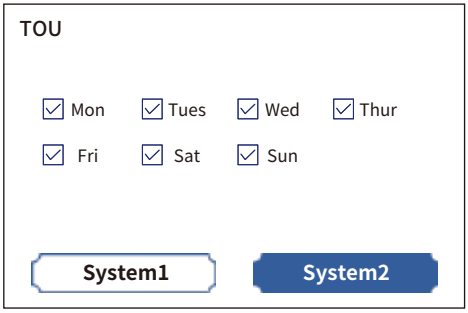

TOU: This interface is used to configure the operating days for "Time of Use" (TOU) scheduling.

For example:
If all days are selected, the PCS will execute TOU functions every day (Monday through Sunday).

5.4 Grid Setup

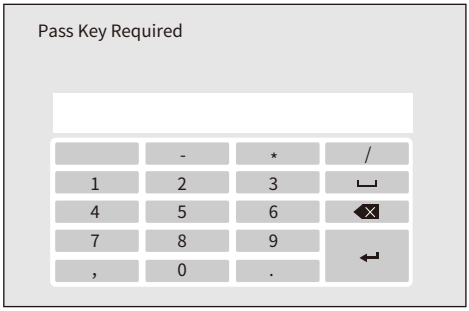

Before entering the Grid Setup menu, you need to enter the password: ****, and press Enter to confirm.

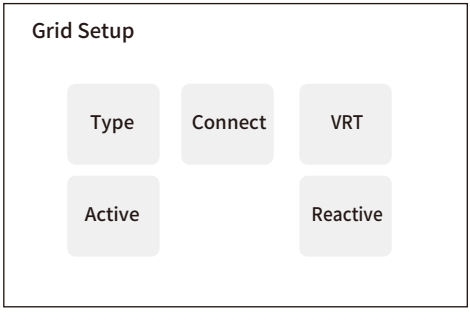

Grid Setup: It contains Type, Connect, VRT(High/Low Voltage Ride Through), Active and Reactive.

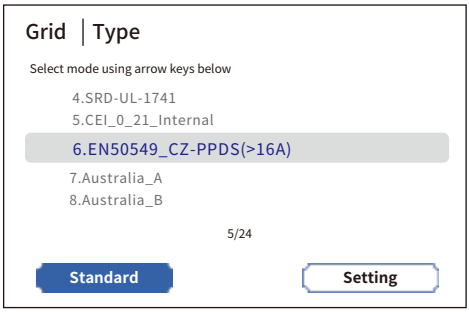

Mode: Slide up and down the blue background area in the middle of the LCD screen to find the desired Grid code.

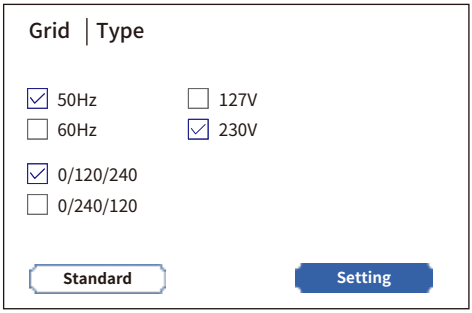

50/60Hz: The frequency of the PCS output AC. If the PCS is connected to the grid, the output frequency should match the grid frequency. If operating in off-grid mode, the PCS output frequency can be set according to the load requirements.
127V/230V: The output voltage between the phase line and neutral line of the PCS. If connected to the grid, the output voltage should match the grid voltage. In off-grid mode, the PCS output voltage can be set based on load requirements.
0/120/240: The phase sequence for grid connection can be L1/L2/L3, L2/L3/L1, or L3/L1/L2. This also applies to power grids with R/S/T or U/V/W phase markings.
0/240/120: The phase sequence for grid connection can be L1/L3/L2, L3/L2/L1, or L2/L1/L3. This also applies to power grids with R/S/T or U/V/W phase markings.

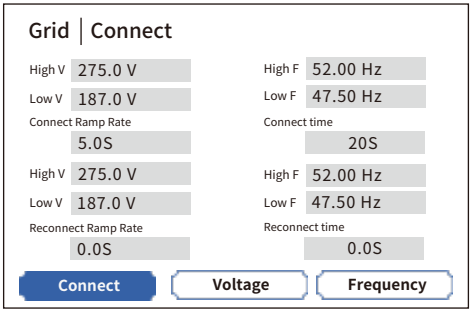

Grid|Connect: Used for condition determination and power control during the initial startup or active grid connection of the PCS.

Connect:
• Low F: Minimum grid frequency allowed. PCS will not connect if below.
• High F: Maximum grid frequency allowed.Exceeding prevents connection.
• Low V: Minimum grid voltage allowed for connection. PCS will not connect if below.
• High V: Maximum grid voltage allowed for connection. PCS will not connect if exceeded.
• Connect Ramp Rate: Power ramp-up rate during initial connection,The time required for the PCS to gradually increase its output power from 0% to 100% of rated capacity when initially connecting to the grid
• Connect time: Delay before attempting connection after self-check.
Reconnect:
• Low F： Minimum grid frequency for reconnection.
• High F: Maximum grid frequency for reconnection.
• Low V: Minimum grid voltage for reconnection.
• High V: Maximum grid voltage for reconnection.
• Reconnect Ramp Rate: Power ramp-up rate during reconnection, The time required for the PCS to gradually increase its output power from 0% to 100% of rated capacity when reconnecting to the grid.
Reconnect time: Delay before attempting reconnection after grid recovery.

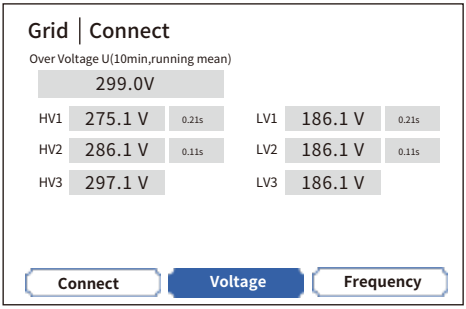

Grid|Connect: These parameters configure the PCS's response logic to grid voltage anomalies during grid connection, forming a hierarchical protection mechanism. When grid voltage exceeds (Over Voltage) or falls below (Under Voltage) set thresholds, the PCS executes corresponding actions based on different trigger levels.

Over Voltage U: If the average grid voltage over a 10-minute period reaches this set value, the PCS will disconnect from the grid.
HV1/HV2: When the grid voltage rises to this set value, the PCS will disconnect from the grid within the specified time.
HV3: When the grid voltage rises to this set value, the PCS will disconnect from the grid immediately.
LV1/LV2: When the grid voltage drops to this set value, the PCS will disconnect from the grid within the specified time.
LV3: When the grid voltage drops to this set value, the PCS will disconnect from the grid immediately.

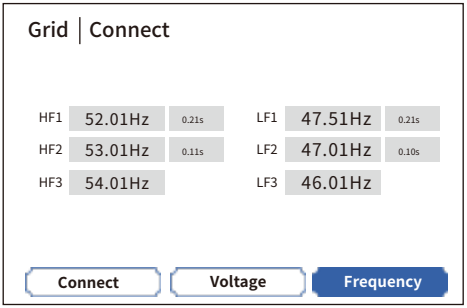

Grid|Connect: These parameters configure the PCS's response logic to grid frequency anomalies during grid connection, forming a hierarchical protection mechanism. When grid voltage exceeds (Over Frequency) or falls below (Under Frequency) set thresholds, the PCS executes corresponding actions based on different trigger levels.

HF1/HF2: When the grid frequency rises to this set value, the PCS will disconnect from the grid within the specified time.
HF3: When the grid frequency rises to this set value, the PCS will disconnect from the grid immediately.
LF1/LF2: When the grid frequency drops to this set value, the PCS will disconnect from the grid within the specified time.
LF3: When the grid frequency drops to this set value, the PCS will disconnect from the grid immediately.

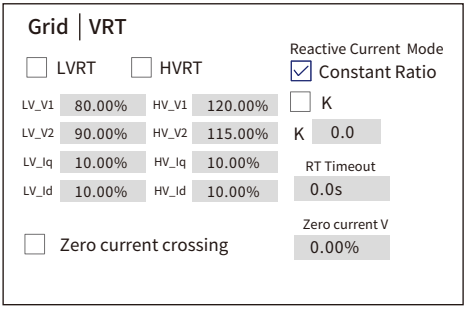

Grid|VRT: These parameters are used to configure active/reactive current support, trigger conditions, and timing control during Low Voltage Ride-Through (LVRT) and High Voltage Ride-Through (HVRT) events.

LVRT: Enable/Disable Low Voltage Ride-Through.
HVRT: Enable/Disable High Voltage Ride-Through.
Constant Ratio: Fixed current compensation ratio (percentage of rated current).
K: Reactive current compensation K-factor.
LV_V1~LV_V2: LVRT initiation conditions.
HV_V1~HV_V2: HVRT initiation conditions.
LV_Iq: Reactive current compensation percentage during LVRT.
LV_Id: Active current compensation percentage during LVRT.
HV_Iq: Reactive current compensation percentage during HVRT.
HV_Id: Active current compensation percentage during HVRT
Zero Current Crossing: Enable/Disable reactive and active current support capability.
Zero Current V: The critical voltage level at which the PCS ceases current output during voltage anomalies. When grid voltage falls below (LVRT) or rises above (HVRT) this threshold, the device will forcibly interrupt current to protect power semiconductors
RT Timeout: The maximum allowable duration for PCS to remain connected during voltage anomalies. If the voltage sag/surge persists beyond this threshold, the device will actively disconnect from the grid to prevent damage.

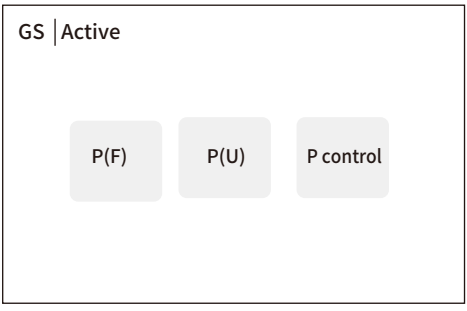

GS|Active: This menu configures the PCS's active power (P) output strategies under different grid conditions, enabling dynamic adjustment of power generation to support grid stability.

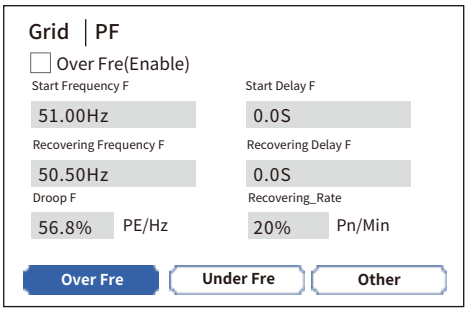

Start Frequency: When the grid frequency reaches or exceeds this set value, the PCS module will gradually reduce its maximum output power.
Start Delay: The delay time before derating begins.
Recovering Frequency: When the grid frequency drops to this set value, the PCS will resume outputting at its rated power.
Recovering Delay: The delay time before power output recovery begins.
Droop Rate: After the grid frequency reaches or exceeds the Start Frequency of the Over-Frequency function, the PCS will reduce its output power at this set rate.
Recovering Rate: After the grid frequency returns to the Recovering Frequency, the PCS will gradually restore its output at the set rate until it reaches its rated power.

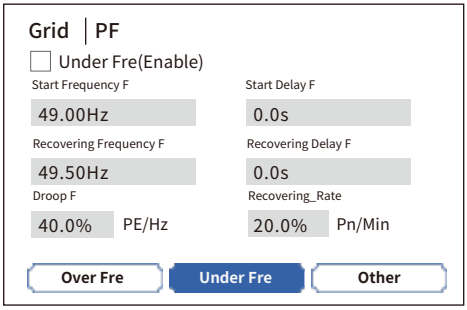

Start Frequency: When the grid frequency drops to this set value, the PCS module will gradually increase its maximum output power.
Start Delay: The delay time before the PCS can output beyond the rated power.
Recovering Frequency: When the grid frequency returns to this set value, the PCS will resume outputting at its rated power.
Recovering Delay: The delay time before power output recovery begins.
Droop Rate : After the grid frequency drops to the Start Frequency of the Under-Frequency function, the PCS will increase its output power at this set rate.
Recovering Rate: After the grid frequency returns to the Recovering Frequency, the PCS will gradually restore its output at the set rate until it reaches its rated power.

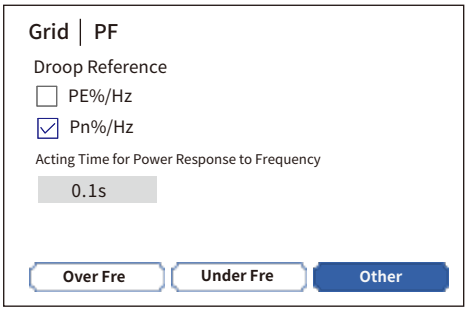

PE%/Hz: It represents the percentage change in pre-overfrequency power (actual power before frequency deviation) per hertz of frequency deviation in a droop control system. It defines how much the active power output of PCS changes in response to frequency variations.
For example, if PE% = 5%/Hz, it means that for every 1 Hz increase in system frequency, the active power output will decrease by 5% of its pre-overfrequency power.
Pn%/Hz: It represents the percentage change in rated power (Pn) per hertz of frequency deviation in a droop control system. It defines how much the active power output of PCS changes in response to frequency variations.
For example, if Pn = 5%/Hz, it means that for every 1 Hz increase in frequency, the power output will decrease by 5% of the rated power.

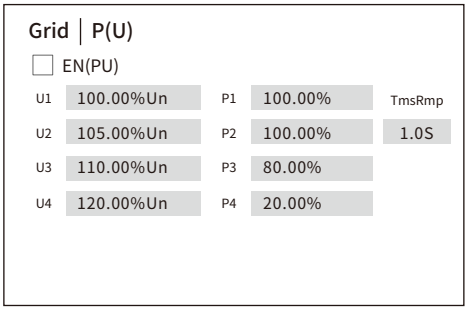

EN(PU) : Adjust the upper limit of PCS active power output based on the voltage at the grid connection point.
U1-U4: The percentage of the current grid voltage relative to the rated voltage for Level 1-4 overvoltage protection.
P1-P4: The percentage of the maximum allowable active power output relative to the rated power for Level 1-4 overvoltage protection.
TmsRmp: The time required to adjust the maximum active power output between P1, P2, P3, and P4.

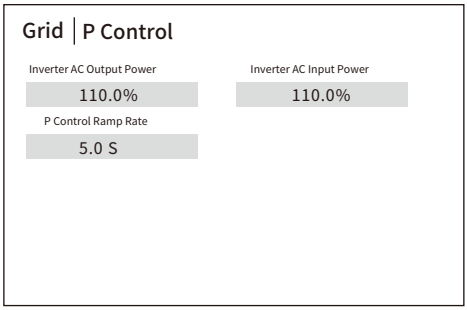

Grid|P Control: This menu is used to configure the charge/discharge power limits and dynamic response characteristics of the Power Conversion System (PCS) in constant power mode.

Inverter AC Output Power: Maximum Discharge Power of PCS in P Control Mode
Inverter AC Input Power: Maximum Charge Power of PCS in P Control Mode
P Control Ramp Rate: The rate at which active power changes, defined as the time required to transition from 0% to 100% of rated power.

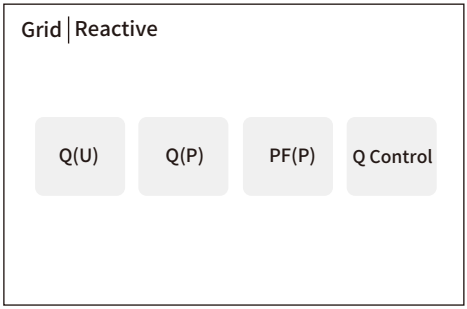

GS|Reactive : It contains Q(U),Q(P),PF(P) and Q control. This menu configures the reactive power (Q) control strategies for Power Conversion Systems (PCS) . By dynamically adjusting reactive power output, it optimizes grid voltage/power factor.

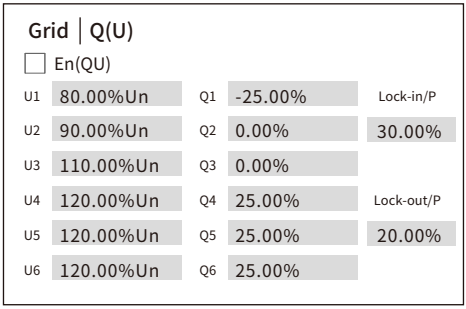

En (QU): Adjust the upper limit of the reactive power output of the PCS based on the voltage at the grid connection point.
U1-U6: The percentage of the current grid voltage relative to the rated voltage for levels 1 to 6 in the Q(U) function.
Q1-Q6: The percentage of the maximum allowable reactive power output relative to the rated power for levels 1 to 6 in theQ(U) function.
Lock-in/P: When the PCS active power is not lower than this set value, the Q(U) function will take effect.
Lock-out/P: When the PCS active power drops below this set value, the Q(U) function will no longer take effect.

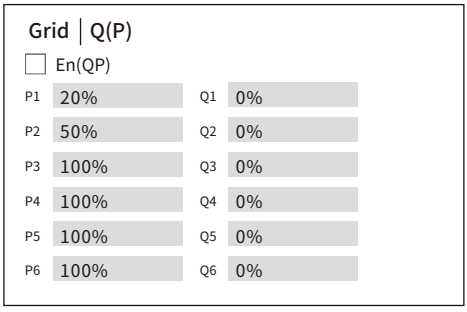

En(QP): Adjust the Reactive Power of PCS based on active power output.
P1-P6: Percentage of current active power output relative to rated power for level 1-6 of P(Q) function.
Q1-Q6: (Q1-Q6) The corresponding set values of reactive power for level 1-6 of P(Q) function.

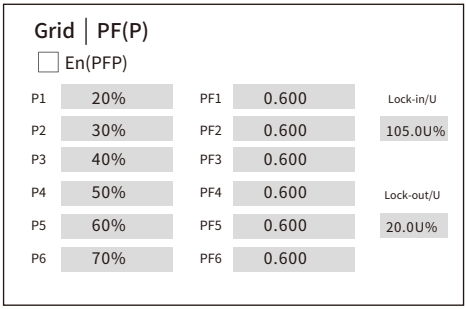

En PF(P): Adjust Power Factor of PCS based on active power output.
P1-P6: Percentage of current active power output relative to rated power for level 1-6 of PF(P) function.
PF1-PF6: (PF1-PF6) The corresponding set values of power factor for level 1-6 of PF(P) function.
Lock-in/U: When the output voltage is not lower than this set value,PF(P) will take effect.
Lock-out/U: When the output voltage returns to this set value or below, PF(P) will not take effect.

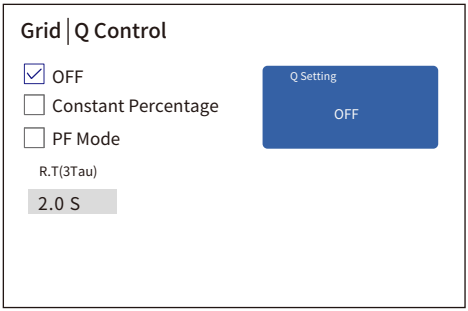

OFF: Disable reactive power function
Constant Percentage: The PCS maintains a constant percentage of reactive power (Q) injection/absorption.
PF Mode: The PCS regulates reactive power in real-time according to the configured target power factor (PF), ensuring stable power factor for the grid or connected loads.
R.T(3Tau): Set reactive power response time.

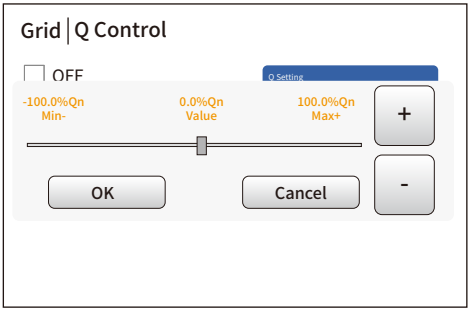

Constant Percentage: Once selected, clicking "Total Power Setting" will open another page for percentage adjustment.

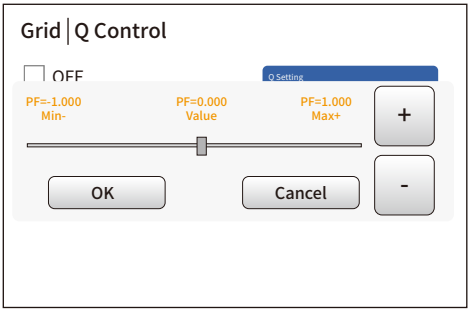

PF Mode: Display Power Factor,Once selected, clicking "Total Power Setting" will open another page for percentage adjustment.

5.5 STS Setup

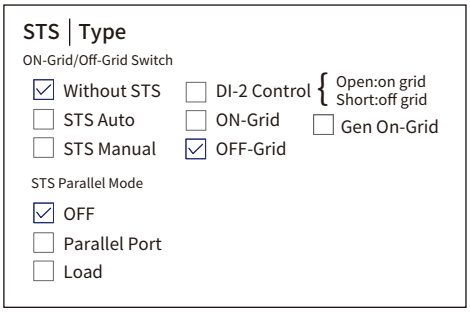

STS|Type: This interface configures on-grid/off-grid switching modes and multi-STS parallel operation.
Three switching modes are available:
Without STS: Manually switch between on-grid and off-grid modes when no STS module is present or via the DI port, where an external device sends signals to control the on grid/off grid switching of the PCS.
STS Auto: When the PCS module operates with an STS module, the STS module automatically switches between on-grid and off-grid modes.
STS Manual: When the PCS module operates with an STS module, manually switch between on-grid and off-grid modes using the STS module.
STS Parallel Mode:
OFF: Disable parallel operation between STS units.
Parallel Port: Enable multi-STS parallel function via the parallel port.
Load: Enable multi-STS parallel function via the STS load port.
Gen On-Grid: When no STS module is present, the diesel generator can be enabled to connect to the PCS AC port. This configuration is typically applied in off-grid scenarios without STS, allowing the diesel generator to function as the grid source. (This setup requires reverse power protection to prevent PCS energy from backfeeding into the diesel generator).
Note: In STS parallel mode (Load), when multiple units are connected via load terminals, the maximum supported off-grid load capacity is limited to 700 kW.

5.6 Device Info

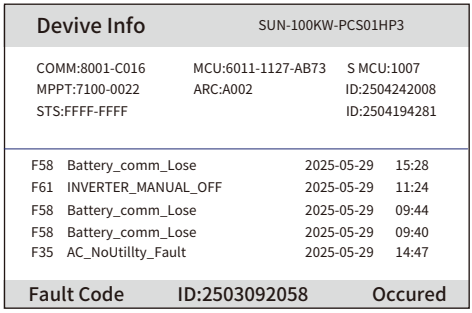

COMM: LCD Communication Board Software Version
MPPT: MPPT Module Control Board Software Version
ID: MPPT Serial Number
STS: STS Module Control Board Software Version
ID: STS Serial Number
MCU: PCS Main Control Unit Software Version
S MCU: PCS Slave Microcontroller Software Version
ARC: Arc Fault Detection Board Software Version

Alarms Code: Alarm code when PCS is something wrong.
ID: PCS Serial Number
Occured: Fault or warning has occured at that time.

5.7 Battery Setup

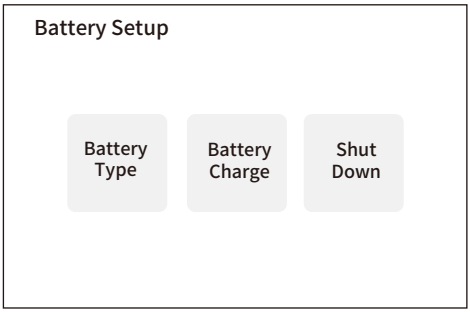

Battery Setup: This interface is used to configure battery parameters, including: Battery type settings, Battery charge settings,Shut down settings.

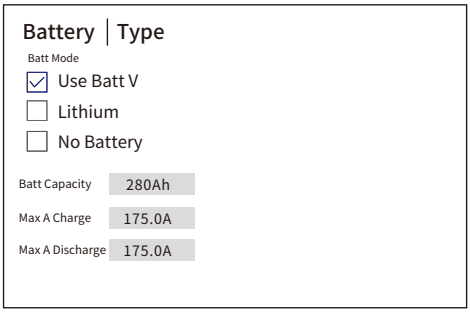

Use Batt V: Used for batteries without BMS communication, such as lead-acid batteries.
Lithium: Select this option for lithium-ion batteries, which require CAN or RS485 communication with the PCS.
No Battery: No batteries are connected to the PCS module. The PCS can operate without a battery system in both single and parallel systems.
Batt Capacity: Battery Cell Capacity.
Max A Charge: Maximum allowable charging current for the battery system.
Max A Discharge: Maximum allowable discharging current for the battery system.

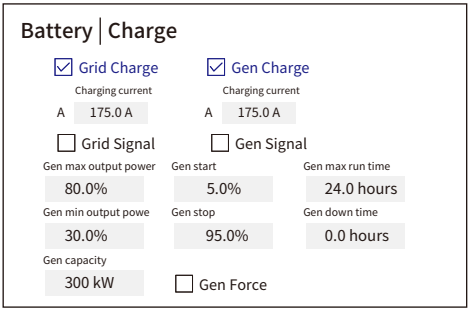

Grid Charge: When enabled, the grid power can be used to charge the battery.
*__Charging current:__ Set the generator charging current (generator connected to the STS Grid port or PCS AC Output).
Gen Charge: When enabled, the generator power can be used to charge the battery.
*__Charging current:__ Set the generator charging current (generator connected to the STS Gen port or PCS AC Output).
Grid Signal: Enable the STS/PCS dry contact (DO) port to send start/stop signals to the diesel generator which is connected to the STS Grid port or PCS AC Output.
Gen Signal: Enable the STS/PCS dry contact (DO) port to send start/stop signals to the diesel generator which is connected to the STS Gen portor PCS AC Output.
Generator Capacity: Set the rated capacity of the generator.
Gen start: Trigger generator startup when battery SOC drops below the set threshold.
Gen stop: Trigger the generator to stop charging when the battery SOC exceeds the set threshold.
Gen min output power: Configure the minimum allowable output power for the diesel generator.
Gen Max Run Time: Define the maximum continuous operating duration for the generator.
Gen max output power: Set the maximum allowable output power for the diesel generator.
Gen Down Time: It indicates the rest time of the Generator before the PCS start it again.
Gen Force: Force start of diesel generator.
(Note: This setting must be manually cleared to stop the generator)

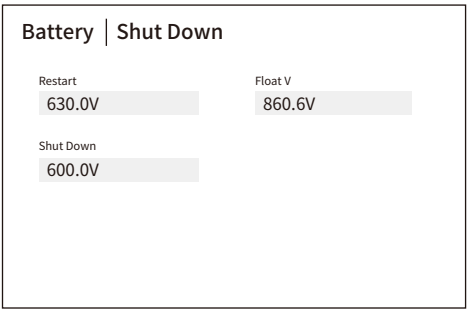

Shut Down: Be valid in off-grid mode, battery can discharge to this SOC, then the DC/AC inverter module of this PCS will be shut down and the solar power can only be used to charge the battery.

Restart: Be valid in off-grid mode, after the DC/AC inverter module of this PCS is shut down, the PV power can only be used to charge the battery. After the battery SOC has resumed to this "Restart" voltage, the DC/AC inverter module will restart to output AC power.

Float V: Set the upper limit of battery full charge voltage.

5.8 Advance

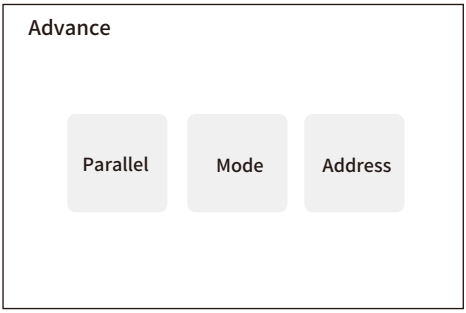

Advance: This interface is used to configure PCS parallel parameters, advanced modes (such as anti-islanding, RCD, and RSIO), and communication addresses.

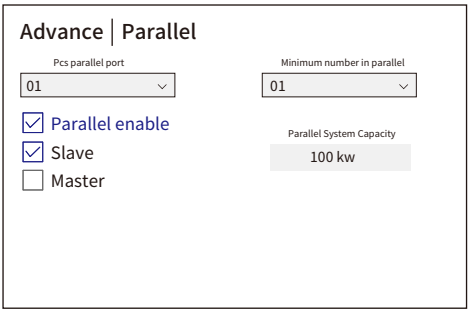

PCS Parallel Port: Set PCS parallel address (01-20). Address "1" is reserved for the master unit.
Parallel Enable: Enable/disable PCS parallel operation
Slave Mode: Configure this PCS as a slave unit
Master Mode: Configure this PCS as the master unit
Minimum Units in Parallel: Minimum number of PCS required for parallel operation
Parallel System Capacity: Total capacity of the parallel system

Note: When an STS is present, the STS defaults to the master device, while all PCS units operate as slaves. Among them, the PCS with address 01 serves as the primary slave (master-slave), responsible for controlling all data distribution and parameter settings.

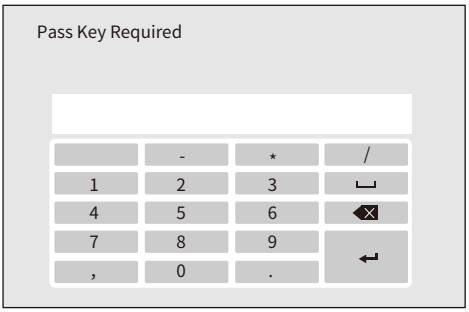

Access the Mode menu: Enter password **** and press Enter.

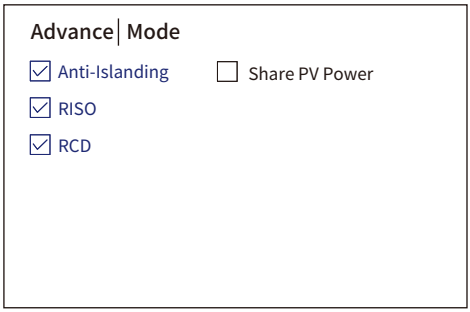

Anti-Islanding: Enable or disable the anti-islanding function, which disconnects the PCS from the grid in the event of a grid fault.
RCD: Residual current monitoring device of the PCS module.
RISO: Insulation impedance detection function of the PCS module.
Share PV Power: Enable photovoltaic power sharing control.

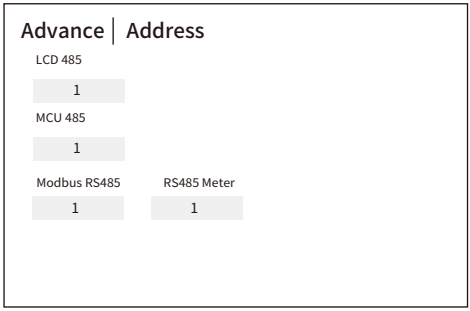

LCD 485: Configure the communication address between the upper computer and the LCD screen.
MCU 485: 4
85 communication between DSP Chip on control board and upper computer.
Modbus RS485: Configure the communication address between the STS and the external device).
RS485 Meter: Configure the communication address between the STS and the meter).

The system's first priority for power is always PV power (if available). The second and third priority sources will be the battery bank or the grid, depending on the settings.The final backup power source will be the generator (if available).

6. Warranty

For warranty terms, please refer to the " General Warranty Agreement - DEYE. "

Under our company's guidance, customers may return products for maintenance or replacement with a product of equal value. Customers are responsible for the necessary freight and other related costs. Any replacement or repair will retain the original product's remaining warranty period. If any part of the product is replaced by the company during the warranty period, all rights and ownership of the replaced product or component will belong to the company.
Factory Warranty Exclusions:
The factory warranty does not cover damage caused by the following:

- Damage during equipment transportation.
- Incorrect installation or commissioning.
- Failure to comply with operation, installation, or maintenance instructions.
- Unauthorized modifications, alterations, or repairs.
- Incorrect use or operation.
- Insufficient ventilation of the equipment.
- Failure to comply with applicable safety standards or regulations.
- Natural disasters or force majeure events (e.g., floods, lightning, overvoltage, storms, fires, etc.).

Additionally, normal wear and tear or any failure that does not affect the product's basic operational is not covered. External scratches, stains, or natural mechanical wear do not constitute a defect.

7. Troubleshooting

Perform troubleshooting using the solutions provided in the table below. If the issue persists, contact after-sales service for further assistance.
Before reaching out to after-sales service, collect the following information to help resolve the issue quickly:
• Device information: Serial number, firmware version, installation date, fault occurrence time, fault frequency, etc.
• Installation environment: Weather conditions, presence of shading or obstructions on PV modules, etc. Providing photos or videos is recommended to assist in problem analysis.
• Utility grid status.

PCS Troubleshooting Form

Error code	Description	Solutions
F01	DC_Inversed_Failure	1. Turn off the built-in or external DC breaker on battery side immediately, and then check the polarity of the power cables between the battery and PCS,if it is indeed reversed, correct it. 2. If the power cable of battery are connected correctly, please contact Deye after sales support team for help.
F02	SlaveMCU_Fault	1. Update the firmware of slave MCU. 2. Check the sampling circuit of battery voltage. 3. If the fault still hadn't been solved, please contact Deye after sales support team for help.
F03	STS_Disconnected	1. Plug or replug the communication cable between the PCS module and the STS module. 2. Replace the communication cable between the PCS module and the STS module. 3. Replace the communication PCB board. 4. If the fault still hadn't been solved, please contact Deye after sales support team for help.
F04	PARA_ID_DUP_WARNING	1.Check if the IDs of different PCS modules in the parallel system are repeated, and set the repeated IDs as different and unused ID value. 2. If the fault still hadn't been solved, please contact Deye after sales support team for help.
F05	EEPROM_Read_Failure	1.Restart the PCS module and see if it will return to normal. 2. If the fault still hadn't been solved, please contact Deye after sales support team for help.
F07	HV_SS_Failure	1.Replace the fuse on the battery input side of PCS module and check the MOS on the battery input side of PCS module. 2.Replace the control PCB board. 3. If the fault still hadn't been solved, please contact Deye after sales support team for help.
F08	Start_Failure	1.Update the firmware of the PCS module. 2. If the fault still hadn't been solved, please contact Deye after sales support team for help.
F09	LC_Comm_Error	1.Check if the communication flat cables between the PCB board of LCD and other parts of PCS module are completed and plugged well. 2.If the fault still hadn't been solved, please contact Deye after sales support team for help.
F10	AuxPowerBoard_Failure	1.Restart the PCS module and check if it can automatically recover. 2.Replace the damaged components or PCB board related to auxiliary power. 3.If the fault still hadn't been solved, please contact Deye after sales support team for help.
F13	Reserved	Reserved
F15	AC_OverCurr_Failure	1.Restart the PCS module and see if it will return to normal. 2.Replace the driver board. 3.Replace the current sensor. 4. If the fault still hadn't been solved, please contact Deye after sales support team for help.
F16	GFCI_Failure	1.Check if any part of the PV cable isolation layer is damaged. 2.Check if the PCS module is assembled normally. 3. If the fault still hadn't been solved, please contact Deye after sales support team for help.
F17	Tz_PV_OverCurr_Fault	1. In some cases, the alarm will automatically disappear. 2.If it does not automatically eliminate, please update the firmware of the PCS module. 3.Check if the sum Isc of your PV arrays on each MPPT input of the MPPT module is in allowed range. 4.If the fault still hadn't been solved, please contact Deye after sales support team for help.

Error code	Description	Solutions
F18	Tz_Ac_OverCurr_Fault	1.Check whether the power grid is normal and the load power is in allowed range or not. 2.Update the firmware of the PCS module. 3. If the fault still hadn't been solved, please contact Deye after sales support team for help.
F22	Tz_EmergStop_Fault	After the emergency situation is resolved, release the emergency stop button.
F23	Tz_GFCI_OC_Fault	1.Check if any part of the PV cable isolation layer is damaged. 2.Check if the PCS module is assembled normally. 3. If the fault still hadn't been solved, please contact Deye after sales support team for help.
F24	DC_Insulation_Fault	1.Check if any part of the PV cable isolation layer is damaged. 2.Check if the PCS module is assembled normally. 3. If the fault still hadn't been solved, please contact Deye after sales support team for help.
F26	BusUnbalance_Fault	1. Reduce the power difference between three phases. 2. If the fault still hadn't been solved, please contact Deye after sales support team for help.
F27	Tz_Balance_OverCurr_Fault	1. Reduce the power difference between three phases. 2. Replace the driver board PCB. 3. If the fault still hadn't been solved, please contact Deye after sales support team for help.
F30	AC_MainContactor_Fault	1.Restart the PCS module to see if the fault can be resolved. 2. Check if the main relays are in normal staus and the AC output voltage is in range. 3.Check if current version of firmware need to be updated. 4.Check if the dirver circuit of the main relays is normal. 5. If the fault still hadn't been solved, please contact Deye after sales support team for help.
F31	AC_SlaveContactor_Fault	1.Restart the PCS module to see if the fault can be resolved. 2. Check if the main relays are in normal staus and the AC output voltage is in range. 3.Check if current version of firmware need to be updated. 4.Check if the dirver circuit of the main relays is normal. 5. If the fault still hadn't been solved, please contact Deye after sales support team for help.
F34	AC_Overload_Fault	1. Shut down some loads to reduce the total power consumption to be in allowed range. 2.Restart the PCS module to see if the fault can be resolved. 3.Check if current version of firmware need to be updated.
F35	AC_NoUtility_Fault	1.Check the AC cable connection, and fix the discovered issues. 2. If the fault still hadn't been solved, please contact Deye after sales support team for help.
F36	AC_GridPhaseSeque_Fault	1.Shut down the PCS module immeditely, and then check if the phase of grid cable connection is consistent with the set phase type 0/120/240 or 0/240/120.
F41	AC_WU_OverVolt_Fault	1.Check the voltage of the power grid. 2.Check the voltage of the generator(if any). 3.Check if the internal sampling circuit is functioning properly. 4. If the fault still hadn't been solved, please contact Deye after sales support team for help.
F42	AC_WU_UnderVolt_Fault	1.Check the voltage of the power grid. 2.Check the voltage of the generator(if any). 3.Check if the internal sampling circuit is functioning properly. 4. If the fault still hadn't been solved, please contact Deye after sales support team for help.

Error code	Description	Solutions
F44	Mst_Disconnect	1. Check the setting of parameters corresponding to parallel function. 2.Check the parallel communication cable and its wiring. 3.Check the hardware components on PCB board correponding to parallel communication. 4. If the fault still hadn't been solved, please contact Deye after sales support team for help.
F45	AC_UV_Overvolt_Fault	1. System shutdown in parallel system is caused by individual PCS fault. 2. Please check the parallel configuration and review the fault code of each PCS.
F46	STS_Fault	1.Check the error code list of STS module to find solution.
F47	AC_OverFreq_Fault	1.Check the frequency of the power grid. 2.Check the frequency of the generator(if any). 3.Check if the internal sampling circuit is functioning properly. 4. If the fault still hadn't been solved, please contact Deye after sales support team for help.
F48	AC_UnderFreq_Fault	1.Check the frequency of the power grid. 2.Check the frequency of the generator(if any). 3.Check if the internal sampling circuit is functioning properly 4. If the fault still hadn't been solved, please contact Deye after sales support team for help.
F50	Tz_BAT_OverCurr_Fault	1.Ensure that the power of loads are in allowable range. 2.Ensure that the SOC or voltage of the battery is sufficiently high. 3. If the fault still hadn't been solved, please contact Deye after sales support team for help.
F52	BAT_OverVoltage_Fault	1.Turn off the external or built-in DC breaker between battery and PCS module immediately, and then check the datasheet of battery to ensure that full charged voltage of battery is in allowable range of PCS module. 2. Restart the battery to resume the built-in relay of BMS. 3. If the fault still hadn't been solved, please contact Deye after sales support team for help.
F53	BAT_SS_RELAY_Fault	1.Update the firmware of the PCS module. 2.Check if the internal sampling circuit is functioning properly 3. If the fault still hadn't been solved, please contact Deye after sales support team for help.
F54	BAT_RELAY_Fault	1.Replace the damaged main contactor on battery side of the PCS module.
F55	DC_VoltHigh_Fault	1.Check if the voltage of battery is in allowable range. 2.Check if the voltage of PV string is in allowable range. 3.Ensure that the load power is relatively stable without significant fluctuations. 4.If the fault still hadn't been solved, please contact Deye after sales support team for help.
F56	DC_VoltLow_Fault	1.Check if the voltage of battery is in allowable range.
F57	AC_BackFeed_Fault	1.Check if the voltage on grid side is stable. 2.Replace the driver board PCB.
F58	Battery_comm_Lose	1.Check if the communication cable is intact and if the wiring is correct. 2.Check the parameter settings related to BMS communication on the PCS module and battery. 3.Check if the communication module of the PCS module is damaged.

F61	INVERTER_MANUAL_OFF	1. Restart the master PCS module, this alarm of slave PCS module will disappear automatically.
F63	PV_ARC_Fault	1.Check the wiring of all PV strings.
F64	Heatsink_LowTemp_Fault	1.Check if the ambient temperature is in allowable range and the ventilation condition is well enough at the installation location. 2.Check if the temperature sensor is normal.

MPPT Troubleshooting Form

Error code	Description	Solutions
F09	Boost Circuit_ Fault	1.Replace the driver board PCB.
F13	CAN_Com_Failure	1.Check if the RJ45 terminals and communication cable for CAN communication between PCS and MPPT module are normal. 2. If the fault still hadn't been solved, please contact Deye after sales support team for help.
F14	DC_OverCurr_Failure	1.This fault rarely occurs,if it happens, please contact the Deye after-sales support team.
F16	Power_Uncontrollable_Fault	1.Update the firmware. 2.Replace the control board PCB.
F19	Over/UnderVolt_Fault	1. Check if the output voltage of PV strings are in allowable range. 2.Check if the voltage of the DC BUS is normal. 3.Check if the sampling circuit for PV input and DC BUS are normal.
F20	Dc_OverCurr_Fault	1.Update the firmware. 2.Replace the driver board PCB.
F24	DC_Insulation_Fault	1.Check and confirm if the insulation layer of the photovoltaic cable is damaged. 2.Confirm if the wiring inside the device is normal.
F30	DC_MainContactor_Fault	1.Replace the damaged main contactor or the whole PCB board.
F31	DC_SlaveContactor_Fault	1.Update the firmware. 2.Replace the pre-charging relay or the whole PCB board.
F55	DC_VoltHigh_Fault	1.Check if the voltage of PV strings are in allowable range 2.Check if the voltage of DC BUS is normal 3.Check if the sampling circuit for PV input and DC BUS are normal.
F64	MPPT_Low/High_Temp_Fault	1.Check if the ambient temperature is in allowable range and the ventilation condition is well enough at the installation location. 2.Check if the temperature sensor is normal.

STS Troubleshooting Form

Error code	Description	Solutions
F05	EEPROM_Read_Failure	Read/Write Memory Error Possible Causes: 1.Memory read or write failure Actions: 1.Restart the machine. If the issue persists, please contact the installer or maintenance department.
F13	Reseverd	Reserved Possible Causes: This fault may be triggered when configuring the PCS for grid mode, parallel mode, battery mode, etc. Proper configuration allows for a restart.
F30	AC_MainContactor_Fault	AC Main Contactor Fault Possible Causes: A short circuit on the grid-side relay, usually caused by a short circuit at the load end. Measures: 1.Check the relay and its AC voltage. 2.Check the relay drive circuit and verify whether the software is compatible with the PCS. 3.Restart the PCS. If the fault persists, please contact the installer or maintenance department.
F31	AC_SlaveContactor_Fault	AC Auxiliary Contactor Fault Possible Causes: An open circuit on the grid-side relay. Measures: 1.Check the relay and its AC voltage. 2.Check the relay drive circuit and verify whether the software is compatible with the PCS. 3.Restart the PCS. If the fault persists, please contact the installer or maintenance department.
F41	AC_WU_OverVolt_Fault	AC WU Line Overvoltage Fault Possible Causes: 1.Check the grid voltage. 2.Check the generator voltage (if applicable). 3.Check the internal voltage sampling.
F42	AC_WU_UnderVolt_Fault	AC WU Line Undervoltage Fault Possible Causes: 1.Check the grid voltage. 2.Check the generator voltage (if applicable). 3.Check the internal voltage sampling.
F47	AC_OverFreq_Fault	AC Frequency Too High Fault 47 Possible Causes and Measures: 1.Check the grid frequency. 2.Check the generator frequency (if applicable). 3.Check the internal voltage sampling.
F48	AC_UnderFreq_Fault	AC Frequency Too Low Fault 48 Possible Causes and Measures: 1.Check the grid frequency. 2.Check the generator frequency (if applicable). 3.Check the internal voltage sampling.
F61	INVERTER_MANUAL_OFF	Manual Shutdown of STS 61 The STS has been manually shut down and will resume operation after restarting.
F64	Heatsink_LowTemp_Fault	STS Overtemperature Fault 64 Caused by excessive heatsink temperature. Possible Causes: 1.High ambient temperature or poor ventilation. 2.Temperature sensor failure.

Chart 8-1 Fault information

8. Datasheet

PCS Module	SUN-100K-PCS01HP3	SUN-125K-PCS01HP3
Battery Data		
Battery Type	Lithium-ion	
Battery Voltage Range(V)	630-1000	
Max. Charging Current(A)	175	200
Max. Discharging Current(A)	175	200
Number of Battery Input	1	
DC Input Data		
DC Input Voltage Range(V)	630-1000	
Max. DC Input Current(A)	200	
AC Input/Output Data		
Rated AC Input/Output Active Power(W)	100000	125000
Max. AC Input/Output Apparent Power(VA)	110000	125000
Rated AC Input/Output Current(A)	151.6/145	189.4/181.2
Max. AC Input/Output Current(A)	166.7/159.5	189.4/181.2
Max. Output Fault Current(A)	350	
Max. Output Overcurrent Protection(A)	450	
Rated Input/Output Voltage/Range(V)	220/380V, 230/400V 0.85Un-1.1Un	
Grid Connection Form	3L+N+PE	
Rated Input/Output Grid Frequency/Range	50Hz/45Hz-55Hz 60Hz/55Hz-65Hz	
Power Factor Adjustment Range	-1 to +1	
Total Current Harmonic Distortion THDi	<3% (of nominal power)	
DC Injection Current	<0.5% In	
Efficiency		
Max. Efficiency	98.5%	
Euro Efficiency	97.8%	
Equipment Protection		
AC Output Overcurrent Protection	Yes	
AC Output Overvoltage Protection	Yes	
AC Output Short Circuit Protection	Yes	
Thermal Protection	Yes	
Anti-islanding protection	Yes	
Surge Protection Level	TYPE II(DC),TYPE II(AC)	
Interface		
LCD/LED display	LCD	
Communication Interface	WIFI,RS485,CAN,Meter	
General Data		
Operating Temperature Range	-40°C to +60°C,＞45°C Derating	
Permissible Ambient Humidity	0-95%	
Noise	＜75dB	
Permissible Altitude	4000m	
Ingress Protection(IP) Rating	IP 65	
Inverter Topology	Non-Isolated	
Over Voltage Category	OVC II(DC), OVC III(AC)	
Cabinet size(W*H*D) [mm]	543W×310H×775D（Excluding connectors and brackets）	

Weight(kg)	70.35
Warranty	5 Years/10 Years the Warranty Period Depends the Final Installation Site of PCS, More Info Please Refer to Warranty Policy
Type of Cooling	Intelligent Air Cooling
Grid Regulation	IEC 61727,IEC 62116,CEI 0-21,EN 50549，NRS 097,RD 140, UNE 217002,OVE-Richtlinie R25,G99,VDE-AR-N 4105
Safety EMC/Standard	IEC/EN 62477-1

MPPT Module	**SUN-MPPT-L01-EU-AM8**
PV String Input Data	
Max. PV Input Power(kW)	200
Max. PV Input Voltage(V)	800
Start-up Voltage(V)	200
MPPT voltage range(V)	180-750*
Full Load MPPT Voltage Range(V)	450-750*
Rated PV Input voltage(V)	600
Max. Input Short Circuit Current (A)	60+60+60+60+60+60+60+60
Max. Operating PV Input Current(A)	40+40+40+40+40+40+40+40
No. of MPP Trackers	8
DC Output Data	
DC Output Voltage Range(V)	630-1000
Max. DC Output Current(A)	200
Efficiency	
Max. Efficiency	＞99%
MPPT Efficiency	＞99.9%
Equipment Protection	
DC input reverse protection	YES
DC ARC protection	Optional
Anti-PID(Potential Induced Degradation)	Optional
DC Switch	YES
Surge Protection Level	TYPE II
General Data	
Operating Temperature Range (°C)	-40°C to 60°C
Permissible Ambient Humidity	0-95%
Permissible Altitude (m)	4000m
Ingress Protection(IP) Rating	IP65
Over Voltage Category	OVC II
Cabinet Size（W*H*D）[mm]	543×198×700
Weight [kg]	41.75
Type Of Cooling	Intelligent air cooling
Safety EMC/Standard	IEC/EN 62109-1
Features	
DC port/AC port	OT terminal
Display	LED
Communication Interface	CAN/RS485

STS Module	SUN-STS500L
Grid/PCS Side Data	
Rated AC Input/Output Active Power(kW)	500
Rated AC Input/Output Current(A)	758/725
Rated Input/Output Voltage(V)	220/380, 230/400
Grid Connection Form	3L/N/PE
Rated Input/Output Grid Frequency	50Hz/60Hz
Load Side Data	
Rated Output Active Power(kW)	500
Rated Output Current(A)	758/725
Rated Output Voltage(V)	220/380, 230/400
Grid Connection Form	3L/N/PE
Rated Output Grid Frequency	50Hz/60Hz
GEN Side Data	
Rated AC Input Active Power(kW)	500
Rated AC Input Current(A)	758/725
Rated Input Voltage(V)	220/380, 230/400
Grid Connection Form	3L/N/PE
Rated Input Grid Frequency	50Hz/60Hz
General Data	
Off grid switching time	＜10ms
Operating Temperature Range	-25°C to 60°C
Permissible Ambient Humidity	0-95%
Permissible Altitude	4000m
Ingress Protection(IP) Rating	IP20
Over Voltage category	OVC III
Cabinet size（W*H*D）[mm]	543×575×671
Weight[kg]	108
Warranty	10
Type Of Cooling	natural cooling
Safety EMC/Standard	IEC/EN 61439-1/-2
Features	
DC port/AC port	OT terminal
Communication Interface	CAN/RS485

* The open-circuit voltage of the PV input must be less than the voltage of the battery cluster at SOC=0%.

9. Appendix I

Definition of PCS communication ports

No.	MPPT-CAN	BATBMS	RJ45	Parallel_A	Parallel_B	Pin sequence of RJ45 port
1	\	485_B	485_B	+12V	+12V	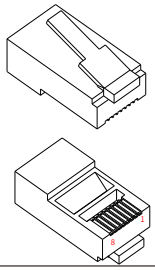
2	\	485_A	485_A	+12V	+12V	
3	CAN-H	GND_485	GND_485	SYNC	SYNC	
4	CAN-H	CAN-H	\	CAN-H	CAN-H	
5	CAN-L	CAN-L	\	CAN-L	CAN-L	
6	CAN-L	GND_485	GND_485	GND_COM	GND_COM	
7	GND-COM	485_A	485_A	-12V	-12V	
8	GND-COM	485_B	485_B	-12V	-12V	

Definition of MPPT communication ports

No.	MPPT-CAN_1 (Communicaton Port For PCS)Parallel 1	MPPT-CAN_2 (Communicaton Port For PCS) Parallel 2	485 is used as the master for host communication	Pin sequence of RJ45 port
1	\	\	CAN-H	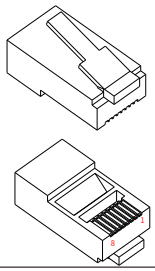
2	\	\	CAN-L	
3	CAN-H	CAN-H	485-A	
4	CAN-H	CAN-H	485-B	
5	CAN-L	CAN-L	GND-COM	
6	CAN-L	CAN-L	12V-COM	
7	\	\	\	
8	\	\	\	

Definition of STS communication ports

No.	STS parallel A	STS parallel B	PCS-CAN	PCS-RS485	RS485	Pin sequence of RJ45 port
1	+12V	+12V	PCS+12V	485_B	BL-485_B	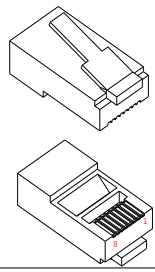
2	+12V	+12V	PCS+12V	485_A	BL-485_A	
3	SYNC1	SYNC1	SYNC	GND-485	GND-485-BL	
4	BL-CAN-H	BL-CAN-H	CAN-H	\	\	
5	BL-CAN-L	BL-CAN-L	CAN-L	\	\	
6	GND-CAN	GND-CAN	GND-CAN	GND-485	GND-485-BL	
7	SYNC2	SYNC2	SYNC2	485_A	BL-485_A	
8	-12V	-12V	PCS-12V	485_B	BL-485_B	

This model of PCS has two types of logger interfaces, DB9 and USB. Please refer to the actual PCS received for the actual interface type.

RS232

No.	RS232
1	
2	TX
3	RX
4	
5	D-GND
6	
7	
8	
9	12Vdc

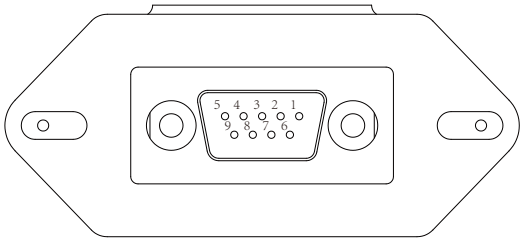

DB9 (RS232)

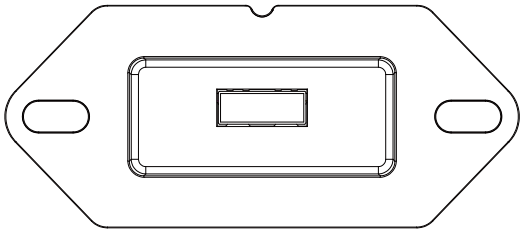

USB

10. EU Declaration Of Conformity

within the scope of the EU directives
- Electromagnetic compatibility 2014/30/EU (EMC)
- Low Voltage Directive 2014/35/EU (LVD)
- Restriction of the use of certain hazardous substances 2011/65/EU (RoHS)

NINGBO DEYE INVERTER TECHNOLOGY CO., LTD. confirms herewith that the products described in this document are in compliance with the fundamental requirements and other relevant provisions of the above mentioned directives. The entire EU Declaration of Conformity and certificate can be found at https://www.deyeinverter.com/download/Declaration_of_Conformity/?tag=55,17,192.

Deye

250401002
www.deyeinverter.com

EU Declaration of Conformity

Product:**PCS Module of ESS**
Models:SUN-100K-PCS01HP3;SUN-125K-PCS01HP3;

Name and address of the manufacturer: Ningbo Deye Inverter Technology Co., Ltd.
No. 26 South Yongjiang Road, Daqi, Beilun, NingBo, China

This declaration of conformity is issued under the sole responsibility of the manufacturer. Also this product is under manufacturer's warranty.
This declaration of conformity is not valid any longer: if the product is modified, supplemented or changed in any other way, as well as in case the product is used or installed improperly.

The object of the declaration described above is in conformity with the relevant Union harmonization legislation: The Low Voltage Directive (LVD) 2014/35/EU;the Electromagnetic Compatibility (EMC) Directive 2014/30/EU;the restriction of the use of certain hazardous substances (RoHS) Directive 2011/65/EU.

References to the relevant harmonized standards used or references to the other technical specifications in relation to which conformity is declared

LVD:	
EN 62477-1:2012/A12:2021	●
EMC:	
EN IEC 61000-6-1:2019	●
EN IEC 61000-6-2:2019	●
EN IEC 61000-6-3:2021	●
EN IEC 61000-6-4:2019	●
EN IEC 61000-3-2:2019+A1:2021	●
EN 61000-3-3:2013/A2:2021/AC:2022-01	●
EN IEC 61000-3-11:2019	●
EN 61000-3-12:2011	●
EN 55011:2016/A2:2021	●

Nom et Titre / Name and Title: Bard Dai
Senior Standards and Certification Engineer

Au nom de / On behalf of: Ningbo Deye Inverter Technology Co., Ltd.
Date / Date (yyyy-mm-dd): 2025-04-01
A / Place: Ningbo, China

Deye

250401001
www.deyeinverter.com

EU Declaration of Conformity

Product:**MPPT Module of ESS**
Models:SUN-MPPT-L01-EU-AM8

Name and address of the manufacturer: Ningbo Deye Inverter Technology Co., Ltd.
No. 26 South Yongjiang Road, Daqi, Beilun, NingBo, China

This declaration of conformity is issued under the sole responsibility of the manufacturer. Also this product is under manufacturer's warranty.
This declaration of conformity is not valid any longer: if the product is modified, supplemented or changed in any other way, as well as in case the product is used or installed improperly.

The object of the declaration described above is in conformity with the relevant Union harmonization legislation: The Low Voltage Directive (LVD) 2014/35/EU;the Electromagnetic Compatibility (EMC) Directive 2014/30/EU;the restriction of the use of certain hazardous substances (RoHS) Directive 2011/65/EU.

References to the relevant harmonized standards used or references to the other technical specifications in relation to which conformity is declared:

LVD:	
EN 62109-1:2010	●
EN 62109-2:2011	●
EMC:	
EN IEC 61000-6-1:2019	●
EN IEC 61000-6-2:2019	●
EN IEC 61000-6-3:2021	●
EN IEC 61000-6-4:2019	●
EN IEC 61000-3-2:2019+A1:2021	●
EN 61000-3-3:2013/A2:2021/AC:2022-01	●
EN IEC 61000-3-11:2019	●
EN 61000-3-12:2011	●
EN 55011:2016/A2:2021	●

Nom et Titre / Name and Title: Bard Dai
Senior Standard and Certification Engineer

Au nom de / On behalf of: Ningbo Deye Inverter Technology Co., Ltd.
Date / Date (yyyy-mm-dd): 2025-04-01
A / Place: Ningbo, China

Deye

250602001
www.deyeinverter.com

EU Declaration of Conformity

Product:**STS Module of ESS**
Models:SUN-STS500L;SUN-STS500L-A;

Name and address of the manufacturer: Ningbo Deye Inverter Technology Co., Ltd.
No. 26 South Yongjiang Road, Daqi, Beilun, NingBo, China

This declaration of conformity is issued under the sole responsibility of the manufacturer. Also this product is under manufacturer's warranty.
This declaration of conformity is not valid any longer: if the product is modified, supplemented or changed in any other way, as well as in case the product is used or installed improperly.

The object of the declaration described above is in conformity with the relevant Union harmonization legislation: The Low Voltage Directive (LVD) 2014/35/EU;the Electromagnetic Compatibility (EMC) Directive 2014/30/EU;the restriction of the use of certain hazardous substances (RoHS) Directive 2011/65/EU.

References to the relevant harmonized standards used or references to the other technical specifications in relation to which conformity is declared:

LVD:	
EN 61439-1:2011	●
EN 61439-2:2011	●
EMC:	
EN IEC 61000-6-1:2019	●
EN IEC 61000-6-2:2019	●
EN IEC 61000-6-3:2021	●
EN IEC 61000-6-4:2019	●
EN IEC 61000-3-2:2019+A1:2021	●
EN 61000-3-3:2013/A2:2021/AC:2022-01	●
EN IEC 61000-3-11:2019	●
EN 61000-3-12:2011	●
EN 55011:2016/A2:2021	●

Nom et Titre / Name and Title: Bard Dai
Senior Standard and Certification Engineer

Au nom de / On behalf of: Ningbo Deye Inverter Technology Co., Ltd.
Date / Date (yyyy-mm-dd): 2025-06-02
A / Place: Ningbo, China

Ningbo Deye Inverter Technology Co., Ltd.
No. 26 South Yongjiang Road, Daqi, Beilun, NingBo, China

NINGBO DEYE INVERTER TECHNOLOGY CO., LTD.

Add. : No.26 South YongJiang Road, Daqi, Beilun, NingBo, China.

Tel. : +86 (0) 574 8622 8957

Fax. : +86 (0) 574 8622 8852

E-mail : service@deye.com.cn

Web. : www.deyeinverter.com

30240301004714